DIRECTIONAL CONTROL POPPET VALVES
27 SERIES



ROSS CONTROLS

DIRECTIONAL CONTROL POPPET 27 SERIES VALVES – KEY FEATURES

- Low weight; compact size
- Valves available with special control functions:
  - Timed sequence actuation and/or deactuation
  - Momentary control of actuation/deactuation from one pressure source
  - Actuating force multiplier, for use with low signal pressures
- Available with choices of internal components for three different temperature ranges
- Can be mounted close to actuator, reducing length of pipe to be pressurized/exhausted on each cycle
- Easily field-convertible for use with an external pilot supply
- Long life expectancy
- Consistent response times over the life of the valve

Valve models for external pilot supply available, consult ROSS.

Explosion-Proof solenoid pilot valves available, see explosion proof valves section F.

For ATEX certified valves order placement, consult ROSS.

VALVE TYPE/SERIES	DESCRIPTION		AVAILABLE INLET PORT SIZES										FUNCTIONS												Page
	Spool & Sleeve	Poppet	1/8	1/4	3/8	1/2	3/4	1	1¼	1½	2	2½	2/2	3/2	3/4	4/2	5/2 Single	5/2 Double	5/3 Closed Center	5/3 Open Center	5/3 Pressure Center	Max Flow (Cv)	Solenoid Control	Direct Solenoid Control	Pressure Control	
27		■		■	■	■	■	■	■	■	■	■	■	■								72	■			D2.3 - D2.5
27		■		■	■	■	■	■	■	■						■						34		■		D2.10 - D2.11
27		■		■	■	■	■	■	■	■			■	■		■						72			■	D2.12 - D2.14
27 Series with Pressure Booster Adaptor																										
		■		■	■	■	■	■	■	■				■								32	■			D2.6
		■		■	■	■	■	■	■	■			■	■								34			■	D2.15
27 Series with Air Index Adaptor																										
		■		■	■	■	■	■	■	■						■						27	■			D2.7
		■		■	■	■	■	■	■	■			■	■								32			■	D2.16
27 Series with Timed Sequence Adaptor																										
		■		■	■	■	■	■	■	■			■	■								34	■		■	D2.8, D2.17
27 Series with Timed Sequence & Timed Sequence Extension Adaptors																										
		■		■	■	■	■	■	■	■				■		■						34	■			D2.9
		■		■	■	■	■	■	■	■			■	■		■						32			■	D2.18
27 Series with Timed In/Out Sequence Adaptor																										
		■		■	■	■	■	■	■	■			■	■								32			■	D2.19
27 Series with Timed-In/Out Sequence & Timed Sequence Extension Adaptors																										
		■		■	■	■	■	■	■	■			■	■		■						34			■	D2.20
27 Series Pressure Controlled with Inlet Port Controlled Timed-In Sequence Adaptor																										
		■		■	■	■	■	■	■	■			■	■		■						34			■	D2.21
27 Series Pressure Controlled with Inlet Port Controlled Timed-In Sequence & Timed Sequence Extension Adaptors																										
		■		■	■	■	■	■	■	■			■	■		■						32			■	D2.22
Options & Accessories																										D2.23

2-Way 2-Position Valves, Spring Return

Port Size 1, 2	Body Size	Normally Closed Valve Model Number# NPT Threads	Normally Closed Valve Model Number# G Threads	Normally Open Valve Model Number# NPT Threads	Normally Open Valve Model Number# G Threads	C_v NC	C_v NO	Average Response Constants** M	Average Response Constants** F NC	Average Response Constants** F NO	Weight lb (kg)
1/4	**3/8**	2771B2001W	D2771B2001W	2772B2001W	D2772B2001W	2.3	2.3	10	0.91	0.91	2.5 (1.2)
3/8	**3/8**	2771B3001W	D2771B3001W	2772B3001W	D2772B3001W	3.8	3.3	10	0.70	0.76	2.5 (1.2)
1/2	3/8	2771B4011W	D2771B4011W	2772B4011W	D2772B4011W	4.0	3.5	10	0.64	0.72	2.5 (1.2)
1/2	3/4	2771B4001W	D2771B4001W	2772B4001W	D2772B4001W	7.7	6.5	14	0.37	0.43	3.3 (1.5)
3/4	3/4	2771B5001W	D2771B5001W	2772B5001W	D2772B5001W	9.0	7.3	14	0.34	0.39	3.3 (1.5)
1	3/4	2771B6011W	D2771B6011W	2772B6011W	D2772B6011W	9.0	7.9	14	0.34	0.37	3.3 (1.5)
1	1¼	2771B6001W	D2771B6001W	2772B6001W	D2772B6001W	24	21	26	0.17	0.17	7.0 (3.2)
1¼	1¼	2771B7001W	D2771B7001W	2772B7001W	D2772B7001W	29	20	26	0.15	0.19	7.0 (3.2)
1½	1¼	2771B8011W	D2771B8011W	2772B8011W	D2772B8011W	29	21	26	0.15	0.18	7.0 (3.2)
1½	2	2771B8001W	D2771B8001W	2772B8001W	D2772B8001W	49	49	41	0.09	0.09	15.5 (6.9)
2	2	2771B9001W	D2771B9001W	2772B9001W	D2772B9001W	57	57	41	0.07	0.07	15.5 (6.9)
2½	2	2771B9011W	D2771B9011W	2772B9011W	D2772B9011W	64	72	41	0.07	0.06	15.5 (6.9)

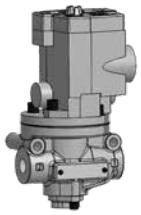

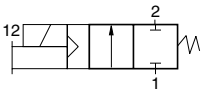

Normally Closed

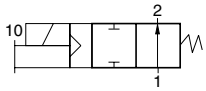

Normally Open

**Voltage:** W=24 VDC; Z=110-120 VAC, 50/60 Hz, e.g., 2771B2001Z. For other voltages, consult ROSS.

****** **Valve Response Time** – Response Time (msec) = M + (F • V). This is the average time required to fill a volume V (cubic inches) to 90% of supply pressure or to exhaust it to 10% of supply pressure. M and F values are shown above.

Valve Dimensions – inches (mm)

Body Size 3/8

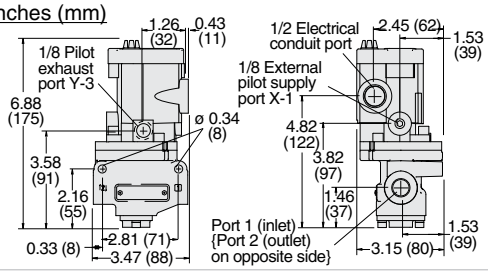

Body Size 3/4

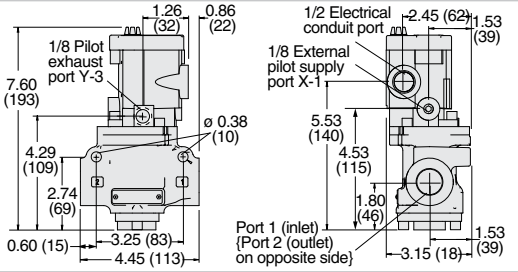

Body Size 1¼

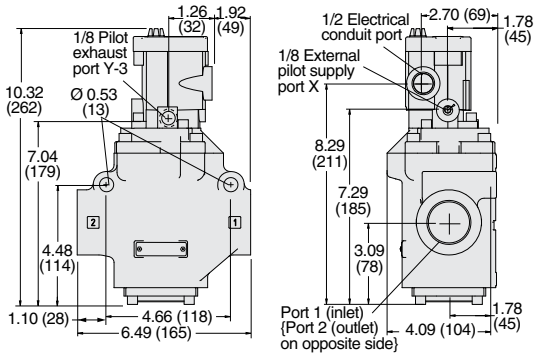

Body Size 2

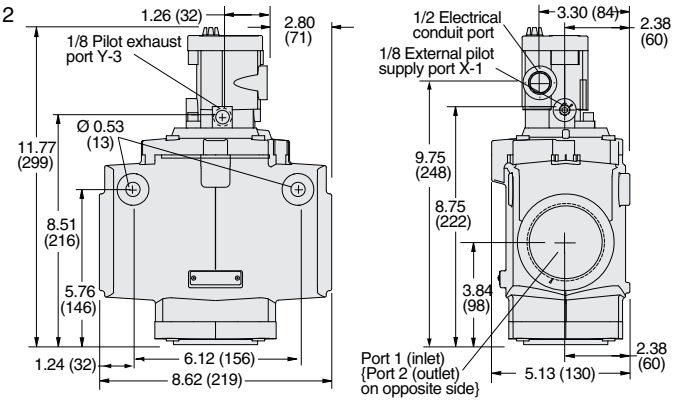

Options: Indicator Light Kits, Manual Override Kits; refer to page D2.23.

STANDARD SPECIFICATIONS (for valves on this page):

Construction Design	Poppet
Mounting Type	In-line
Solenoids	Rated for continuous duty
Voltage	24 volts DC; 110-120 volts AC, 50/60 Hz
Power Consumption	14 watts on DC; 87 VA inrush, 30 VA holding on 50 or 60 Hz
Temperature	**Ambient:** 40° to 120°F (4° to 50°C) **Media:** 40° to 175°F (4° to 80°C)
Flow Media	Filtered air
Pilot Supply	Internal or External

Operating Pressure	**Body Size 3/8 & 1½:** 15 to 150 psig (1 to 10 bar) **Body Size 2:** 30 to 150 psig (2 to 10 bar) **Pilot Supply** - *When external pilot supply, pressure must be equal to or greater than inlet pressure.*
Construction Material	**Valve Body:** Cast Aluminum **Poppet:** Acetal and Stainless Steel **Seals:** Buna-N
Manual Override	Flush; rubber, non-locking
Safety Integrity Level (SIL) - Certified by TÜV Rheinland in accordance to IEC 61508 and IEC 61511 safety integrity level 2 (SIL 2) and EN ISO 13849-1, PL c (with application specific diagnosis) in singular application with HFT = 0 and SIL 3 and PL e in redundant application with HFT≥1, for details see certificate.	

Valves with EN (DIN) connector available, consult ROSS.
For ATEX certified valves, consult ROSS. For FM, CSA approved Explosion-Proof valves, see section F.

FM APPROVED

IMPORTANT NOTE: Please read carefully and thoroughly all of the **CAUTIONS, WARNINGS** on the inside back cover.

D2

D

3-Way 2-Position Valves, Spring Return

Port Size 1, 2	Port Size 3	Body Size	Normally Closed Valve Model Number* NPT Threads	Normally Closed Valve Model Number* G Threads	Normally Open Valve Model Number* NPT Threads	Normally Open Valve Model Number* G Threads	C_v NC 1-2	C_v NC 2-3	C_v NO 1-2	C_v NO 2-3	Average Response Constants** M	F NC 1-2	F NC 2-3	F NO 1-2	F NO 2-3	Weight lb (kg)
1/4	1/2	3/8	2773B2001W	D2773B2001W	2774B2001W	D2774B2001W	2.5	3.1	2.3	2.7	10	0.90	0.80	0.99	0.88	2.5 (1.2)
3/8	1/2	3/8	2773B3001W	D2773B3001W	2774B3001W	D2774B3001W	3.6	5.3	2.8	3.2	10	0.70	0.50	0.90	0.77	2.5 (1.2)
1/2	1/2	3/8	2773B4011W	D2773B4011W	2774B4011W	D2774B4011W	3.3	5.3	2.8	3.2	10	0.75	0.50	0.90	0.76	2.5 (1.2)
1/2	1	3/4	2773B4001W	D2773B4001W	2774B4001W	D2774B4001W	6.3	9.2	6.3	8.0	11	0.43	0.27	0.46	0.60	3.3 (1.5)
3/4	1	3/4	2773B5001W	D2773B5001W	2774B5001W	D2774B5001W	7.7	11	6.9	7.4	11	0.36	0.26	0.45	0.60	3.3 (1.5)
1	1	3/4	2773B6011W	D2773B6011W	2774B6011W	D2774B6011W	8	12	6.8	7.5	11	0.34	0.25	0.40	0.59	3.3 (1.5)
1	1½	1¼	2773B6001W	D2773B6001W	2774B6001W	D2774B6001W	23	34	17	24	28	0.17	0.14	0.20	0.17	7.0 (3.2)
1¼	1½	1¼	2773B7001W	D2773B7001W	2774B7001W	D2774B7001W	30	32	19	24	28	0.15	0.15	0.19	0.17	7.0 (3.2)
1½	1½	1¼	2773B8011W	D2773B8011W	2774B8011W	D2774B8011W	30	31	19	23	28	0.15	0.15	0.19	0.16	7.0 (3.2)
1½	2½	2	2773B8001W	D2773B8001W	2774B8001W	D2774B8001W	68	70	57	59	76	0.05	0.04	0.07	0.04	16.5 (7.4)
2	2½	2	2773B9001W	D2773B9001W	2774B9001W	D2774B9001W	70	70	58	61	76	0.05	0.04	0.05	0.04	16.5 (7.4)
2½	2½	2	2773B9011W	D2773B9011W	2774B9011W	D2774B9011W	70	71	54	55	76	0.05	0.04	0.50	0.04	16.5 (7.4)

 # Voltage: W=24 VDC; Z=110-120 VAC, 50/60 Hz, e.g., 2773B2001Z. For other voltages, consult ROSS.

** **Valve Response Time** – Response Time (msec) = M + (F • V). This is the average time required to fill a volume V (cubic inches) to 90% of supply pressure or to exhaust it to 10% of supply pressure. M and F values are shown above.



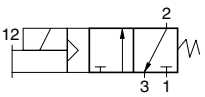

Normally Closed

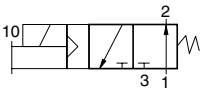

Normally Open

Valve Dimensions – inches (mm)

Body Size 3/8

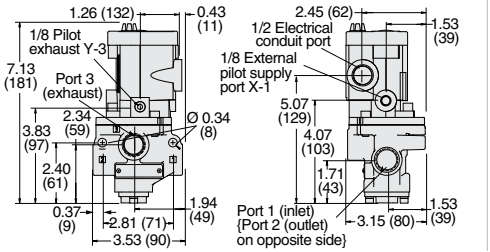

Body Size 3/4

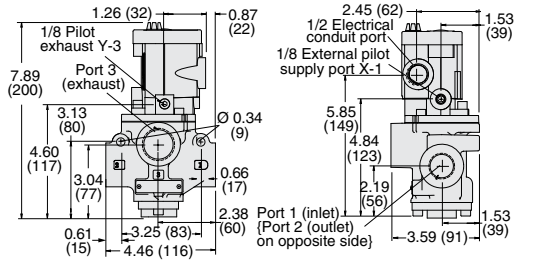

Body Size 1¼

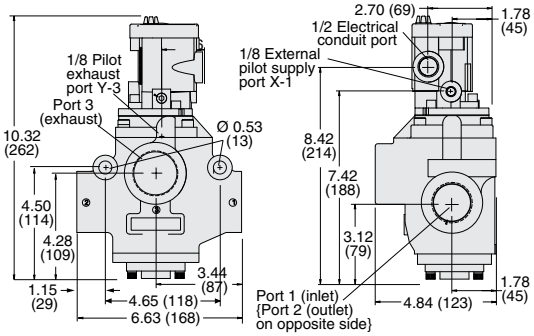

Body Size 2

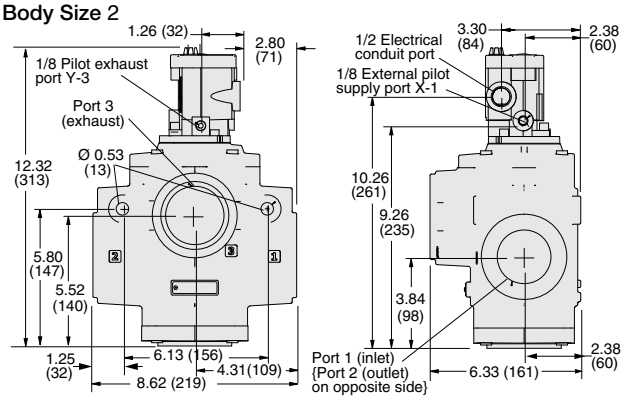

Options: Indicator Light Kits, Manual Override Kits; refer to page D2.23. Silencers ordered separately, refer to page D2.23.

STANDARD SPECIFICATIONS (for valves on this page):

Construction Design	Poppet
Mounting Type	In-line
Solenoids	Rated for continuous duty
Voltage	24 volts DC; 110-120 volts AC, 50/60 Hz
Power Consumption	14 watts on DC; 87 VA inrush, 30 VA holding on 50 or 60 Hz
Temperature	**Ambient:** 40° to 120°F (4° to 50°C) **Media:** 40° to 175°F (4° to 80°C)
Flow Media	Filtered air
Pilot Supply	Internal or External

Operating Pressure	**Body Size 3/8 & 1½:** 15 to 150 psig (1 to 10 bar) **Body Size 2:** 30 to 150 psig (2 to 10 bar) **Pilot Supply** - *When external pilot supply, pressure must be equal to or greater than inlet pressure.*
Construction Material	**Valve Body:** Cast Aluminum **Poppet:** Acetal and Stainless Steel **Seals:** Buna-N
Manual Override	Flush; rubber, non-locking
Safety Integrity Level (SIL) - Certified by TÜV Rheinland in accordance to IEC 61508 and IEC 61511 safety integrity level 2 (SIL 2) and EN ISO 13849-1, PL c (with application specific diagnosis) in singular application with HFT = 0 and SIL 3 and PL e in redundant application with HFT≥1, for details see certificate.	

Valves with EN (DIN) connector available, consult ROSS.
For ATEX certified valves, consult ROSS. For FM, CSA approved Explosion-Proof valves, see section F.

FM APPROVED

IMPORTANT NOTE: Please read carefully and thoroughly all of the **CAUTIONS, WARNINGS** on the inside back cover.

© ROSS CONTROLS®. All Rights Reserved.

4-Way 2-Position Valves, Spring Return

Port Size		Body Size	Valve Model Number#		C_v		Average Response Constants**			Weight lb (kg)
								F		
1, 2, 4	3		NPT Threads	G Threads	1-2, 1-4	4-3, 2-3	M	1-2, 1-4	4-3, 2-3	
1/4	1/2	3/8	2776B2001W	D2776B2001W	2.1	2.9	10	0.92	0.92	3.0 (1.4)
3/8	1/2	3/8	2776B3001W	D2776B3001W	2.9	4.2	10	0.90	0.90	3.0 (1.4)
1/2	1/2	3/8	2776B4011W	D2776B4011W	3.1	7.3	10	0.89	0.73	3.0 (1.4)
1/2	1	3/4	2776B4001W	D2776B4001W	5.6	8.1	26	0.50	0.66	5.3 (2.4)
3/4	1	3/4	2776B5001W	D2776B5001W	7.0	9.3	26	0.36	0.55	5.3 (2.4)
1	1	3/4	2776B6011W	D2776B6011W	7.8	10	26	0.35	0.50	5.3 (2.4)
1	1½	1¼	2776B6001W	D2776B6001W	19	26	79	0.17	0.22	11.3 (5.1)
1¼	1½	1¼	2776B7001W	D2776B7001W	21	27	79	0.16	0.18	11.3 (5.1)
1½	1½	1¼	2776B8011W	D2776B8011W	22	27	79	0.15	0.15	11.3 (5.1)

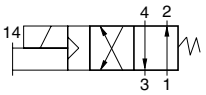

 # Voltage: W=24 VDC; Z=110-120 VAC, 50/60 Hz, e.g., 2776B2001Z. For other voltages, consult ROSS.
** **Valve Response Time** – Response Time (msec) = M + (F • V). This is the average time required to fill a volume V (cubic inches) to 90% of supply pressure or to exhaust it to 10% of supply pressure. M and F values are shown above.

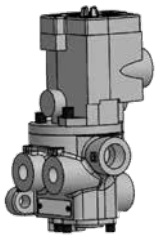

Valve Dimensions – inches (mm)

Body Size 3/8

Body Size 3/4

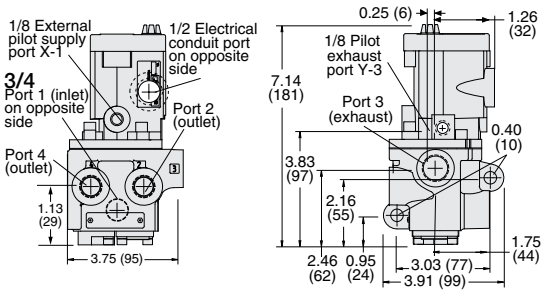

Body Size 3/4

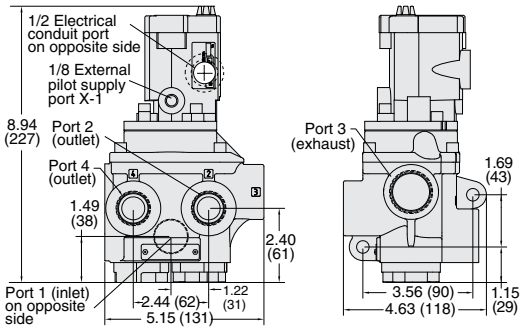

Body Size 1¼

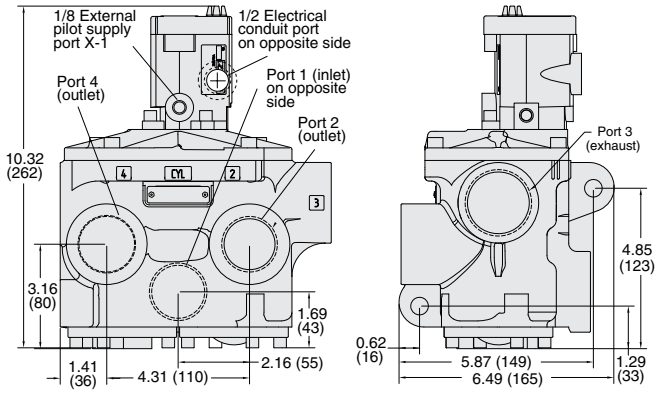

Options: Indicator Light Kits, Manual Override Kits; refer to page D2.23. Silencers ordered separately, refer to page D2.23.

STANDARD SPECIFICATIONS (for valves on this page):

Construction Design	Poppet
Mounting Type	In-line
Solenoids	Rated for continuous duty
Voltage	24 volts DC; 110-120 volts AC, 50/60 Hz
Power Consumption	14 watts on DC; 87 VA inrush, 30 VA holding on 50 or 60 Hz
Temperature	**Ambient:** 40° to 120°F (4° to 50°C)
	Media: 40° to 175°F (4° to 80°C)
Flow Media	Filtered air
Pilot Supply	Internal or External

Operating Pressure	15 to 150 psig (1 to 10 bar)
	Pilot Supply - *When external pilot supply, pressure must be equal to or greater than inlet pressure.*
Construction Material	**Valve Body:** Cast Aluminum **Poppet:** Acetal and Stainless Steel **Seals:** Buna-N
Manual Override	Flush; rubber, non-locking
Safety Integrity Level (SIL) - Certified by TÜV Rheinland in accordance to IEC 61508 and IEC 61511 safety integrity level 2 (SIL 2) and EN ISO 13849-1, PL c (with application specific diagnosis) in singular application with HFT = 0 and SIL 3 and PL e in redundant application with HFT≥1, for details see certificate.	

Valves with EN (DIN) connector available, consult ROSS.
For ATEX certified valves, consult ROSS. For FM, CSA aproved Explosion-Proof valves, see section F.

IMPORTANT NOTE: Please read carefully and thoroughly all of the **CAUTIONS, WARNINGS** on the inside back cover.

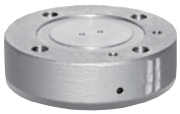

Pressure Booster Adaptor: Increases the actuating force on the valve piston. It should be used when the inlet and pilot pressures are below the minimums specified for the valve. It should also be used when an external pilot supply with a lower pressure than the inlet pressure is used. The valve's pilot pressure is applied to a piston in the pilot booster adaptor that has a larger area than the piston in the valve. The force on the piston in the adaptor is thereby larger than that which could be produced by the piston in the valve. This larger force is applied to the valve's piston directly so that there is then sufficient force to shift the valve properly.

3-Way 2-Position Valves, Spring Return

			Normally Closed					
Port Size		Body Size	Valve Model Number#		C_v		Dimension A inches (mm)	Weight lb (kg)
1, 2	3		NPT Threads	G Threads	1-2	2-3		
1/4	1/2	3/8	2773B2009W	D2773B2009W	2.5	3.1	0.75 (19)	2.5 (1.2)
3/8	1/2	3/8	2773B3009W	D2773B3009W	3.6	5.3	0.75 (19)	2.5 (1.2)
1/2	1/2	3/8	2773B4019W	D2773B4019W	3.3	5.3	0.75 (19)	2.5 (1.2)
1/2	1	3/4	2773B4009W	D2773B4009W	6.3	9.2	0.75 (19)	3.3 (1.5)
3/4	1	3/4	2773B5009W	D2773B5009W	7.7	11	0.75 (19)	3.3 (1.5)
1	1	3/4	2773B6019W	D2773B6019W	8	12	0.75 (19)	3.3 (1.5)
1	1½	1¼	2773B6009W	D2773B6009W	23	34	1.25 (32)	7.0 (3.2)
1¼	1½	1¼	2773B7009W	D2773B7009W	30	32	1.25 (32)	7.0 (3.2)
1½	1½	1¼	2773B8019W	D2773B8019W	30	31	1.25 (32)	7.0 (3.2)

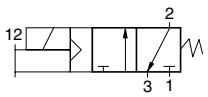

 # Voltage: W=24 VDC; Z=110-120 VAC, 50/60 Hz, e.g., 2773B2009Z. For other voltages, consult ROSS.

Detailed dimensions, see corresponding valves models pages.

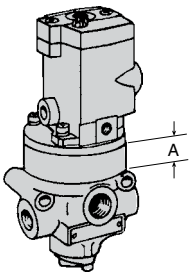

Options: Indicator Light Kits, Manual Override Kits; refer to page D2.23. Silencers ordered separately, refer to page D2.23.

STANDARD SPECIFICATIONS (for valves on this page):

Construction Design	Poppet
Mounting Type	In-line
Solenoids	Rated for continuous duty
Voltage	24 volts DC; 110-120 volts AC, 50/60 Hz
Power Consumption	14 watts on DC; 87 VA inrush, 30 VA holding on 50 or 60 Hz
Temperature	**Ambient:** 40° to 120°F (4° to 50°C)
	Media: 40° to 175°F (4° to 80°C)
Flow Media	Filtered air
Pilot Supply	Internal or External

Operating Pressure	15 to 150 psig (1 to 10 bar)
	Pilot Supply - *When external pilot supply, pressure must be equal to or greater than inlet pressure.*
Construction Material	**Valve Body:** Cast Aluminum **Poppet:** Acetal and Stainless Steel **Seals:** Buna-N
Manual Override	Flush; rubber, non-locking
Safety Integrity Level (SIL) - Certified by TÜV Rheinland in accordance to IEC 61508 and IEC 61511 safety integrity level 2 (SIL 2) and EN ISO 13849-1, PL c (with application specific diagnosis) in singular application with HFT = 0 and SIL 3 and PL e in redundant application with HFT≥1, for details see certificate.	

Valves with EN (DIN) connector available, consult ROSS.
For ATEX certified valves, consult ROSS. For FM, CSA approved Explosion-Proof valves, see section F.

IMPORTANT NOTE: Please read carefully and thoroughly all of the **CAUTIONS, WARNINGS** on the inside back cover.

© ROSS CONTROLS®. All Rights Reserved.

Air Index Adaptor: Allows a valve controlled by a single solenoid pilot to function as an impulse controlled, mechanically detented valve. A momentary electrical signal to the solenoid actuates the valve and holds it in the actuated position. A second momentary signal from the same source returns the valve to its deactuated position.



4-Way 2-Position Valves, Spring Return

Port Size		Body Size	Valve Model Number#		C_v		Weight lb (kg)
1, 2, 4	3		NPT Threads	G Threads	1-2, 1-4	4-3, 2-3	
1/4	1/2	3/8	2776B2008W	D2776B2008W	2.1	2.9	3.0 (1.4)
3/8	1/2	3/8	2776B3008W	D2776B3008W	2.9	4.2	3.0 (1.4)
1/2	1/2	3/8	2776B4018W	D2776B4018W	3.1	7.3	3.0 (1.4)
1/2	1	3/4	2776B4008W	D2776B4008W	5.6	8.1	5.3 (2.4)
3/4	1	3/4	2776B5008W	D2776B5008W	7.0	9.3	5.3 (2.4)
1	1	3/4	2776B6018W	D2776B6018W	7.8	10	5.3 (2.4)
1	1½	1¼	2776B6008W	D2776B6008W	19	26	11.3 (5.1)
1¼	1½	1¼	2776B7008W	D2776B7008W	21	27	11.3 (5.1)
1½	1½	1¼	2776B8018W	D2776B8018W	22	27	11.3 (5.1)

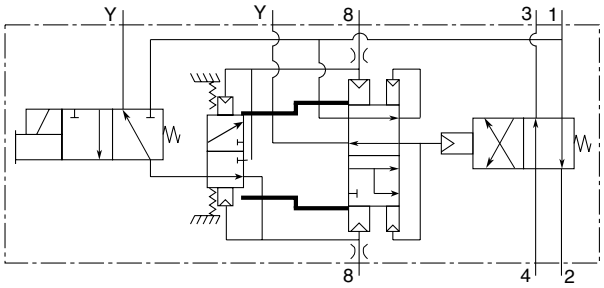

 # Voltage: W=24 VDC; Z=110-120 VAC, 50/60 Hz, e.g., 2776B2008X. For other voltages, consult ROSS.

Body Size 3/4

Detailed dimensions, see corresponding valves models pages.

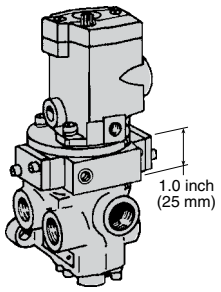

Options: Indicator Light Kits, Manual Override Kits; refer to page D2.23. Silencers ordered separately, refer to page D2.23.

STANDARD SPECIFICATIONS (for valves on this page):

Construction Design	Poppet
Mounting Type	In-line
Solenoids	Rated for continuous duty
Voltage	24 volts DC; 110-120 volts AC, 50/60 Hz
Power Consumption	14 watts on DC; 87 VA inrush, 30 VA holding on 50 or 60 Hz
Temperature	**Ambient:** 40° to 120°F (4° to 50°C)
	Media: 40° to 175°F (4° to 80°C)
Flow Media	Filtered air
Pilot Supply	Internal or External

Operating Pressure	40 to 150 psig (2.8 to 10 bar)
	Pilot Supply - *When external pilot supply, pressure must be equal to or greater than inlet pressure.*
Construction Material	**Valve Body:** Cast Aluminum **Poppet:** Acetal and Stainless Steel **Seals:** Buna-N
Manual Override	Flush; rubber, non-locking
Safety Integrity Level (SIL) - Certified by TÜV Rheinland in accordance to IEC 61508 and IEC 61511 safety integrity level 2 (SIL 2) and EN ISO 13849-1, PL c (with application specific diagnosis) in singular application with HFT = 0 and SIL 3 and PL e in redundant application with HFT≥1, for details see certificate.	

Valves with EN (DIN) connector available, consult ROSS.
For ATEX certified valves, consult ROSS. For FM, CSA approved Explosion-Proof valves, see section F.

IMPORTANT NOTE: Please read carefully and thoroughly all of the **CAUTIONS, WARNINGS** on the inside back cover.

D2

D

2-Way 2-Position Valves, Spring Return

Port Size	Body Size	Normally Closed Valve Model Number*#		Normally Open Valve Model Number*#		C_v		Weight lb (kg)
1, 2		Timed In	Timed Out	Timed In	Timed Out	NC	NO	
1/4	3/8	2771B2004W	2771B2005W	2772B2004W	2772B2005W	2.3	2.3	3.5 (1.6)
3/8	3/8	2771B3004W	2771B3005W	2772B3004W	2772B3005W	3.8	3.3	3.5 (1.6)
1/2	3/8	2771B4014W	2771B4015W	2772B4014W	2772B4015W	4.0	3.5	3.5 (1.6)
1/2	3/4	2771B4004W	2771B4005W	2772B4004W	2772B4005W	7.7	6.5	4.3 (2.0)
3/4	3/4	2771B5004W	2771B5005W	2772B5004W	2772B5005W	9.0	7.3	4.3 (2.0)
1	3/4	2771B6014W	2771B6015W	2772B6014W	2772B6015W	9.0	7.9	4.3 (2.0)
1	1¼	2771B6004W	2771B6005W	2772B6004W	2772B6005W	24	21	9.0 (4.1)
1¼	1¼	2771B7004W	2771B7005W	2772B7004W	2772B7005W	29	20	9.0 (4.1)
1½	1¼	2771B8014W	2771B8015W	2772B8014W	2772B8015W	29	21	9.0 (4.1)

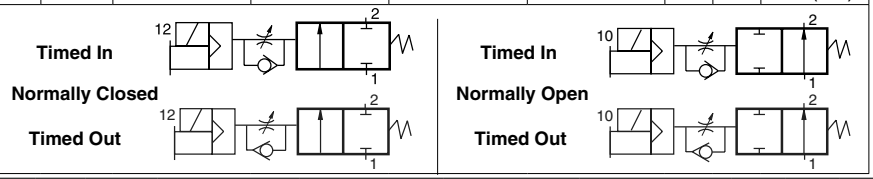



Timed Sequence Adaptor: Allows the actuation and/or de-actuation of a valve to be delayed up to 30 seconds for 2/2 valves, and up to 3 seconds for 3/2 and 4/2 valves. The time delay function is controlled by a continuously adjustable tapered needle. Longer time delays can be obtained by using this adaptor in conjunction with the timed sequence extension adaptor, see next page.

OPERATION

Timed In Adaptor: Solenoid energized; after preset delay valve is actuated. Solenoid de-energized; valve immediately deactuated.

Timed Out Adaptor: Solenoid energized; valve immediately actuated. Solenoid de-energized; after preset delay valve is deactuated.

3-Way 2-Position Valves, Spring Return

Port Size		Body Size	Normally Closed Valve Model Number*#		Normally Open Valve Model Number*#		C_v NC		C_v NO		Weight lb (kg)
1, 2	3		Timed In	Timed Out	Timed In	Timed Out	1-2	2-3	1-2	2-3	
1/4	1/2	3/8	2773B2004W	2773B2005W	2774B2004W	2774B2005W	2.5	3.1	2.3	2.7	3.5 (1.6)
3/8	1/2	3/8	2773B3004W	2773B3005W	2774B3004W	2774B3005W	3.6	5.3	2.8	3.2	3.5 (1.6)
1/2	1/2	3/8	2773B4014W	2773B4015W	2774B4014W	2774B4015W	3.3	5.3	2.8	3.2	3.5 (1.6)
1/2	1	3/4	2773B4004W	2773B4005W	2774B4004W	2774B4005W	6.3	9.2	6.3	8.0	4.3 (2.0)
3/4	1	3/4	2773B5004W	2773B5005W	2774B5004W	2774B5005W	7.7	11	6.9	7.4	4.3 (2.0)
1	1	3/4	2773B6014W	2773B6015W	2774B6014W	2774B6015W	8	12	6.8	7.5	4.3 (2.0)
1	1½	1¼	2773B6004W	2773B6005W	2774B6004W	2774B6005W	23	34	17	24	9.0 (4.1)
1¼	1½	1¼	2773B7004W	2773B7005W	2774B7004W	2774B7005W	30	32	19	24	9.0 (4.1)
1½	1½	1¼	2773B8014W	2773B8015W	2774B8014W	2774B8015W	30	31	19	23	9.0 (4.1)

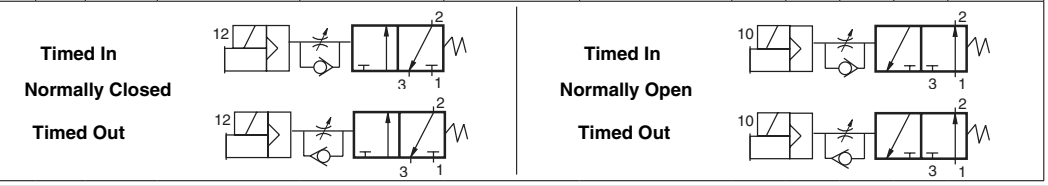

Detailed dimensions, see corresponding valves models pages.

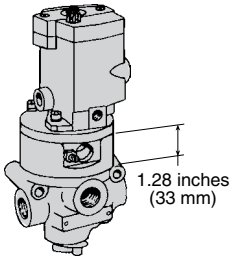

* **NPT port threads.** For BSPP threads add a "D" prefix to the model number e.g., D2771B2004Z.

\# **Voltage:** W=24 VDC; Z=110-120 VAC, 50/60 Hz, e.g., 2771B2004Z. For other voltages, consult ROSS.

Options: Indicator Light Kits, Manual Override Kits; refer to page D2.23. Silencers ordered separately, refer to page D2.23.

STANDARD SPECIFICATIONS (for valves on this page):

Construction Design	Poppet
Mounting Type	In-line
Solenoids	Rated for continuous duty
Voltage	24 volts DC; 110-120 volts AC, 50/60 Hz
Power Consumption	14 watts on DC; 87 VA inrush, 30 VA holding on 50 or 60 Hz
Temperature	**Ambient:** 40° to 120°F (4° to 50°C)
	Media: 40° to 175°F (4° to 80°C)
Flow Media	Filtered air
Pilot Supply	Internal or External

Operating Pressure	15 to 150 psig (1 to 10 bar)
	Pilot Supply - *When external pilot supply, pressure must be equal to or greater than inlet pressure.*
Construction Material	**Valve Body:** Cast Aluminum **Poppet:** Acetal and Stainless Steel **Seals:** Buna-N
Manual Override	Flush; rubber, non-locking
Time Delay Interval	**2/2 Valves:** Up to 30 seconds. **3/2 Valves:** Up to 3 seconds.
Safety Integrity Level (SIL) - Certified by TÜV Rheinland in accordance to IEC 61508 and IEC 61511 safety integrity level 2 (SIL 2) and EN ISO 13849-1, PL c (with application specific diagnosis) in singular application with HFT = 0 and SIL 3 and PL e in redundant application with HFT≥1, for details see certificate.	

Valves with EN (DIN) connector available, consult ROSS.
For ATEX certified valves, consult ROSS. For FM, CSA approved Explosion-Proof valves, see section F.

FM APPROVED

IMPORTANT NOTE: Please read carefully and thoroughly all of the **CAUTIONS, WARNINGS** on the inside back cover.

© **ROSS** CONTROLS®. All Rights Reserved.

Timed Sequence & Timed Sequence Extension Adaptors: Used in conjunction can increase the time delay interval up to 60 seconds. It also helps to obtain "snap" action of the valve. By keeping pilot air off the main valve piston until the pressure has built high enough to ensure prompt valve response, the timed sequence extension adaptor prevents the piston from creeping.





3-Way 2-Position Valves, Spring Return

Port Size		Body Size	Normally Closed		Normally Open		C_v				Weight lb (kg)
			Valve Model Number*#		Valve Model Number*#		NC		NO		
1, 2	3		Timed In	Timed Out	Timed In	Timed Out	1-2	2-3	1-2	2-3	
1/4	1/2	3/8	2773B2006W	2773B2007W	2774B2006W	2774B2007W	2.5	3.1	2.3	2.7	3.5 (1.6)
3/8	1/2	3/8	2773B3006W	2773B3007W	2774B3006W	2774B3007W	3.6	5.3	2.8	3.2	3.5 (1.6)
1/2	1/2	3/8	2773B4016W	2773B4017W	2774B4016W	2774B4017W	3.3	5.3	2.8	3.2	3.5 (1.6)
1/2	1	3/4	2773B4006W	2773B4007W	2774B4006W	2774B4007W	6.3	9.2	6.3	8.0	4.3 (2.0)
3/4	1	3/4	2773B5006W	2773B5007W	2774B5006W	2774B5007W	7.7	11	6.9	7.4	4.3 (2.0)
1	1	3/4	2773B6016W	2773B6017W	2774B6016W	2774B6017W	8	12	6.8	7.5	4.3 (2.0)
1	1½	1¼	2773B6006W	2773B6007W	2774B6006W	2774B6007W	23	34	17	24	9.0 (4.1)
1¼	1½	1¼	2773B7006W	2773B7007W	2774B7006W	2774B7007W	30	32	19	24	9.0 (4.1)
1½	1½	1¼	2773B8016W	2773B8017W	2774B8016W	2774B8017W	30	31	19	23	9.0 (4.1)

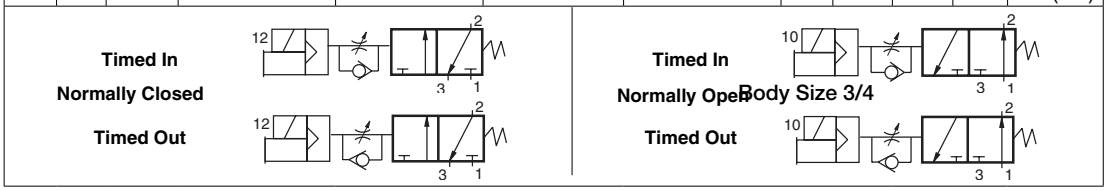

4-Way 2-Position Valves, Spring Return

Port Size		Body Size	Valve Model Number*#		C_v		Weight lb (kg)
1, 2, 4	3		Timed In	Timed Out	1-2, 1-4	4-3, 2-3	
1/4	1/2	3/8	2776B2006W	2776B2007W	2.1	2.9	3.0 (1.4)
3/8	1/2	3/8	2776B3006W	2776B3007W	2.9	4.2	3.0 (1.4)
1/2	1/2	3/8	2776B4016W	2776B4017W	3.1	7.3	3.0 (1.4)
1/2	1	3/4	2776B4006W	2776B4007W	5.6	8.1	5.3 (2.4)
3/4	1	3/4	2776B5006W	2776B5007W	7.0	9.3	5.3 (2.4)
1	1	3/4	2776B6016W	2776B6017W	7.8	10	5.3 (2.4)
1	1½	1¼	2776B6006W	2776B6007W	19	26	11.3 (5.1)
1¼	1½	1¼	2776B7006W	2776B7007W	21	27	11.3 (5.1)
1½	1½	1¼	2776B8016Z	2776B8017Z	22	27	11.3 (5.1)



Detailed dimensions,
see corresponding valves models pages.

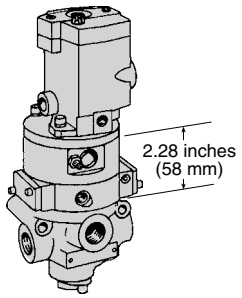

* **NPT port threads.** For BSPP threads add a "D" prefix to the model number e.g., D2773B2006Z.
\# **Voltage:** W=24 VDC; Z=110-120 VAC, 50/60 Hz, e.g., 2773B2006Z. For other voltages, consult ROSS.

Options: Indicator Light Kits, Manual Override Kits; refer to page D2.23. Silencers ordered separately, refer to page D2.23.

STANDARD SPECIFICATIONS (for valves on this page):

Construction Design	Poppet
Mounting Type	In-line
Solenoids	Rated for continuous duty
Voltage	24 volts DC; 110-120 volts AC, 50/60 Hz
Power Consumption	14 watts on DC; 87 VA inrush, 30 VA holding on 50 or 60 Hz
Temperature	**Ambient:** 40° to 120°F (4° to 50°C)
	Media: 40° to 175°F (4° to 80°C)
Flow Media	Filtered air
Pilot Supply	Internal or External

Operating Pressure	15 to 150 psig (1 to 10 bar)
	Pilot Supply - *When external pilot supply, pressure must be equal to or greater than inlet pressure.*
Construction Material	**Valve Body:** Cast Aluminum **Poppet:** Acetal and Stainless Steel **Seals:** Buna-N
Manual Override	Flush; rubber, non-locking
Adjustable Time Delay	Up to 30 seconds.
Safety Integrity Level (SIL) - Certified by TÜV Rheinland in accordance to IEC 61508 and IEC 61511 safety integrity level 2 (SIL 2) and EN ISO 13849-1, PL c (with application specific diagnosis) in singular application with HFT = 0 and SIL 3 and PL e in redundant application with HFT≥1, for details see certificate.	

Valves with EN (DIN) connector available, consult ROSS.
For ATEX certified valves, consult ROSS. For FM, CSA approved Explosion-Proof valves, see section F.

IMPORTANT NOTE: Please read carefully and thoroughly all of the **CAUTIONS, WARNINGS** on the inside back cover.

D2

D

3-Way 2-Position Valves, Detented

Port Size 1, 2	Port Size 3	Body Size	Normally Closed Valve Model Number# NPT Threads	Normally Closed Valve Model Number# G Threads	Normally Open Valve Model Number# NPT Threads	Normally Open Valve Model Number# G Threads	C_v NC 1-2	C_v NC 2-3	C_v NO 1-2	C_v NO 2-3	Average Response Constants** M	F NC 1-2	F NC 2-3	F NO 1-2	F NO 2-3	Weight lb (kg)
1/4	1/2	3/8	2773B2003W	D2773B2003W	2774B2003W	D2774B2003W	2.5	3.1	2.3	2.7	30	0.90	0.80	0.99	0.88	3.5 (1.6)
3/8	1/2	3/8	2773B3003W	D2773B3003W	2774B3003W	D2774B3003W	3.6	5.3	2.8	3.2	30	0.70	0.50	0.90	0.77	3.5 (1.6)
1/2	1/2	3/8	2773B4013W	D2773B4013W	2774B4013W	D2774B4013W	3.3	5.3	2.8	3.2	30	0.75	0.50	0.90	0.76	3.5 (1.6)
1/2	1	3/4	2773B4003W	D2773B4003W	2774B4003W	D2774B4003W	6.3	9.2	6.3	8.0	32	0.43	0.17	0.46	0.60	4.3 (1.9)
3/4	1	3/4	2773B5003W	D2773B5003W	2774B5003W	D2774B5003W	7.7	11	6.9	7.4	32	0.36	0.26	0.45	0.60	4.3 (1.9)
1	1	3/4	2773B6013W	D2773B6013W	2774B6013W	D2774B6013W	8	12	6.8	7.5	32	0.34	0.25	0.40	0.59	4.3 (1.9)
1	1½	1¼	2773B6003W	D2773B6003W	2774B6003W	D2774B6003W	23	34	17	24	52	0.17	0.14	0.20	0.17	8.0 (3.6)
1¼	1½	1¼	2773B7003W	D2773B7003W	2774B7003W	D2774B7003W	30	32	19	24	52	0.15	0.15	0.19	0.17	8.0 (3.6)
1½	1½	1¼	2773B8013W	D2773B8013W	2774B8013W	D2774B8013W	30	31	19	23	52	0.15	0.15	0.19	0.16	8.0 (3.6)

 # Voltage: W=24 VDC; Z=110-120 VAC, 50/60 Hz, e.g., 2773B2003Z. For other voltages, consult ROSS.
** **Valve Response Time** – Response Time (msec) = M + (F • V). This is the average time required to fill a volume V (cubic inches) to 90% of supply pressure or to exhaust it to 10% of supply pressure. M and F values are shown above.

Valve Dimensions – inches (mm)

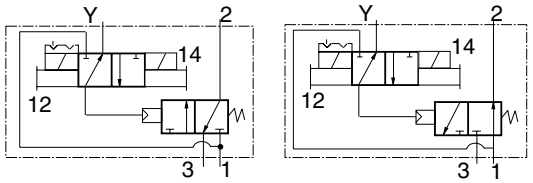

Normally Closed Normally Open

Body Size 3/8

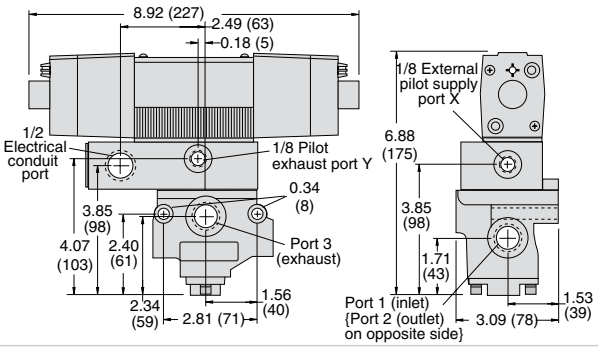

Body Size 3/4

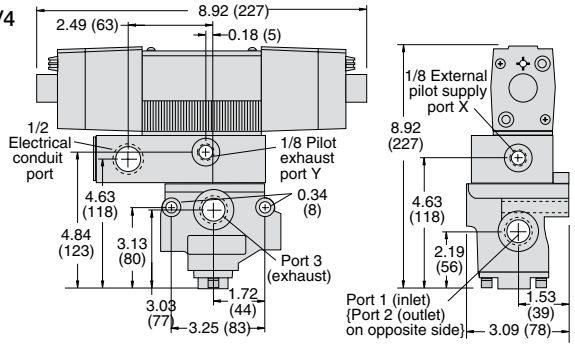

Body Size 1¼

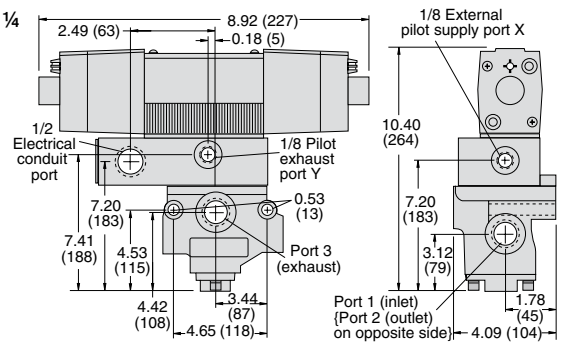

Silencers ordered separately, refer to page D2.23.

STANDARD SPECIFICATIONS (for valves on this page):

Construction Design	Poppet
Mounting Type	In-line
Solenoids	Rated for continuous duty
Voltage	24 volts DC; 110-120 volts AC, 50/60 Hz
Power Consumption (each solenoid)	20 watts on DC; 190 VA inrush, 40 VA holding on 50 or 60 Hz
Temperature	**Ambient:** 40° to 120°F (4° to 50°C)
	Media: 40° to 175°F (4° to 80°C)
Flow Media	Filtered air

Pilot Supply	Internal or External
Operating Pressure	15 to 150 psig (1 to 10 bar)
	Pilot Supply - *When external pilot supply, pressure must be equal to or greater than inlet pressure.*
Construction Material	**Valve Body:** Cast Aluminum
	Poppet: Acetal and Stainless Steel
	Seals: Buna-N
Manual Override	Flush; rubber, non-locking
Safety Integrity Level (SIL) - Certified by TÜV Rheinland in accordance to IEC 61508 and IEC 61511 safety integrity level 2 (SIL 2) and EN ISO 13849-1, PL c (with application specific diagnosis) in singular application with HFT = 0 and SIL 3 and PL e in redundant application with HFT≥1, for details see certificate.	

Valves with EN (DIN) connector available, consult ROSS.
For ATEX certified valves, consult ROSS. For FM, CSA approved Explosion-Proof valves, see section F.

FM APPROVED C SA US

IMPORTANT NOTE: Please read carefully and thoroughly all of the **CAUTIONS, WARNINGS** on the inside back cover.

© ROSS CONTROLS®. All Rights Reserved.



4-Way 2-Position Valves, Detented

Port Size		Body Size	Valve Model Number#		C_v		Average Response Constants**			Weight lb (kg)
								F		
1, 2, 4	3		NPT Threads	G Threads	1-2, 1-4	4-3, 2-3	M	1-2, 1-4	4-3, 2-3	
1/4	1/2	3/8	2776B2003W	D2776B2003W	2.1	2.9	30	0.92	0.92	4.0 (1.8)
3/8	1/2	3/8	2776B3003W	D2776B3003W	2.9	4.2	30	0.90	0.90	4.0 (1.8)
1/2	1/2	3/8	2776B4013W	D2776B4013W	3.1	4.3	30	0.89	0.73	4.0 (1.8)
1/2	1	3/4	2776B4003W	D2776B4003W	5.6	8.1	46	0.50	0.66	6.3 (2.8)
3/4	1	3/4	2776B5003W	D2776B5003W	7.0	9.3	46	0.36	0.55	6.3 (2.8)
1	1	3/4	2776B6013W	D2776B6013W	7.8	10	46	0.35	0.50	6.3 (2.8)
1	1½	1¼	2776B6003W	D2776B6003W	19	26	99	0.17	0.22	12.3 (5.5)
1¼	1½	1¼	2776B7003W	D2776B7003W	21	27	99	0.16	0.18	12.3 (5.5)
1½	1½	1¼	2776B8013W	D2776B8013W	22	27	99	0.15	0.15	12.3 (5.5)

 # Voltage: W=24 VDC; Z=110-120 VAC, 50/60 Hz, e.g., 2776B2003Z. For other voltages, consult ROSS.
** **Valve Response Time** – Response Time (msec) = M + (F • V). This is the average time required to fill a volume V (cubic inches) to 90% of supply pressure or to exhaust it to 10% of supply pressure. M and F values are shown above.

Valve Dimensions – inches (mm)

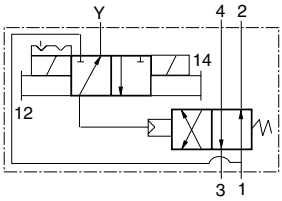

Body Size 3/8

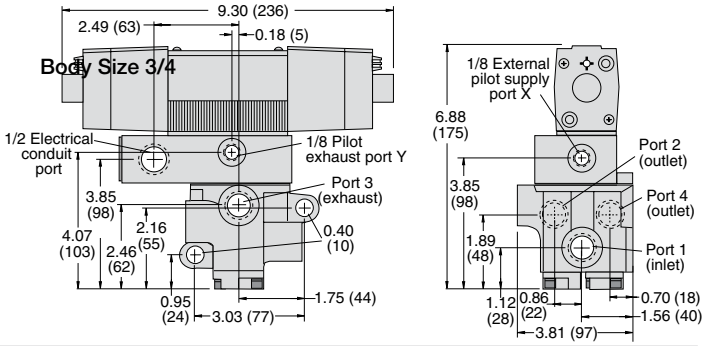

Body Size 3/4

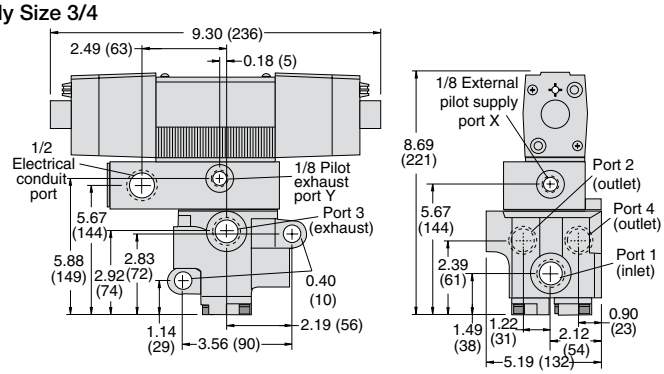

Body Size 1¼

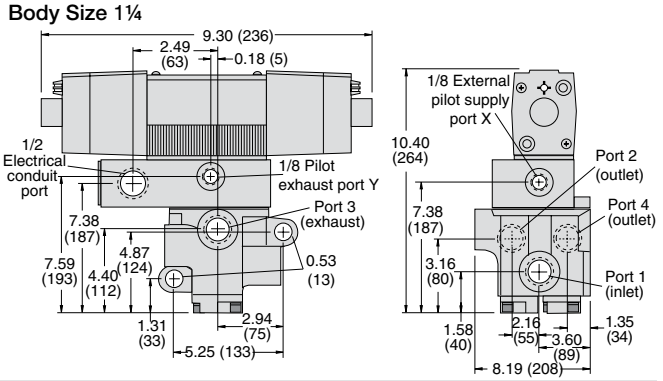

Silencers ordered separately, refer to page D2.23.

STANDARD SPECIFICATIONS (for valves on this page):

Construction Design	Poppet
Mounting Type	In-line
Solenoids	Rated for continuous duty
Voltage	24 volts DC; 110-120 volts AC, 50/60 Hz
Power Consumption (each solenoid)	20 watts on DC; 190 VA inrush, 40 VA holding on 50 or 60 Hz
Temperature	**Ambient:** 40° to 120°F (4° to 50°C)
	Media: 40° to 175°F (4° to 80°C)
Flow Media	Filtered air

Pilot Supply	Internal or External
Operating Pressure	15 to 150 psig (1 to 10 bar)
	Pilot Supply - *When external pilot supply, pressure must be equal to or greater than inlet pressure.*
Construction Material	**Valve Body:** Cast Aluminum **Poppet:** Acetal and Stainless Steel **Seals:** Buna-N
Manual Override	Flush; rubber, non-locking
Safety Integrity Level (SIL) - Certified by TÜV Rheinland in accordance to IEC 61508 and IEC 61511 safety integrity level 2 (SIL 2) and EN ISO 13849-1, PL c (with application specific diagnosis) in singular application with HFT = 0 and SIL 3 and PL e in redundant application with HFT≥1, for details see certificate.	

Valves with EN (DIN) connector available, consult ROSS.
For ATEX certified valves, consult ROSS. For FM, CSA approved Explosion-Proof valves, see section F.

FM APPROVED

IMPORTANT NOTE: Please read carefully and thoroughly all of the **CAUTIONS, WARNINGS** on the inside back cover.

D2

D

2-Way 2-Position Valves, Spring Return

Port Size	Body Size	Normally Closed Valve Model Number		Normally Open Valve Model Number		C_v		Average Response Constants**			Weight lb (kg)
						NC	NO	M	F		
1, 2		NPT Threads	G Threads	NPT Threads	G Threads				NC	NO	
1/4	3/8	2751A2001	D2751A2001	2752A2001	D2752A2001	2.3	2.3	10	0.91	0.91	1.3 (0.6)
3/8	3/8	2751A3001	D2751A3001	2752A3001	D2752A3001	3.8	3.3	10	0.70	0.76	1.3 (0.6)
1/2	3/8	2751A4011	D2751A4011	2752A4011	D2752A4011	4.0	3.5	10	0.64	0.72	1.3 (0.6)
1/2	3/4	2751A4001	D2751A4001	2752A4001	D2752A4001	7.7	6.5	14	0.37	0.43	2.0 (0.9)
3/4	3/4	2751A5001	D2751A5001	2752A5001	D2752A5001	9.0	7.3	14	0.34	0.39	2.0 (0.9)
1	3/4	2751A6011	D2751A6011	2752A6011	D2752A6011	9.0	7.9	14	0.34	0.37	2.0 (0.9)
1	1¼	2751A6001	D2751A6001	2752A6001	D2752A6001	24	21	26	0.17	0.17	8.0 (3.6)
1¼	1¼	2751A7001	D2751A7001	2752A7001	D2752A7001	29	20	26	0.15	0.19	8.0 (3.6)
1½	1¼	2751A8011	D2751A8011	2752A8011	D2752A8011	29	21	26	0.15	0.18	8.0 (3.6)
1½	2	2751A8001	D2751A8001	2752A8001	D2752A8001	49	49	41	0.09	0.09	14.3 (6.4)
2	2	2751A9001	D2751A9001	2752A9001	D2752A9001	57	57	41	0.07	0.07	14.3 (6.4)
2½	2	2751A9011	D2751A9011	2752A9011	D2752A9011	64	72	41	0.07	0.06	14.3 (6.4)

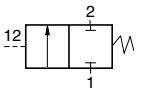

Normally Closed

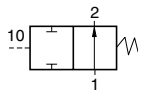

Normally Open

** **Valve Response Time** – Response Time (msec) = M + (F • V). This is the average time required to fill a volume V (cubic inches) to 90% of supply pressure or to exhaust it to 10% of supply pressure. M and F values are shown above.

Valve Dimensions – inches (mm)

Body Size 3/8

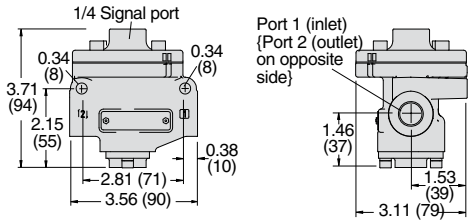

Body Size 3/4

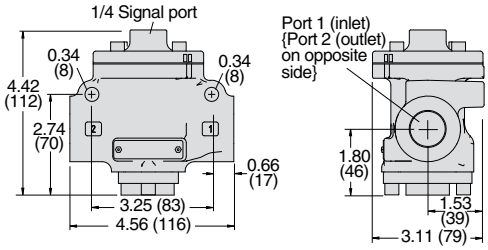

Body Size 1¼

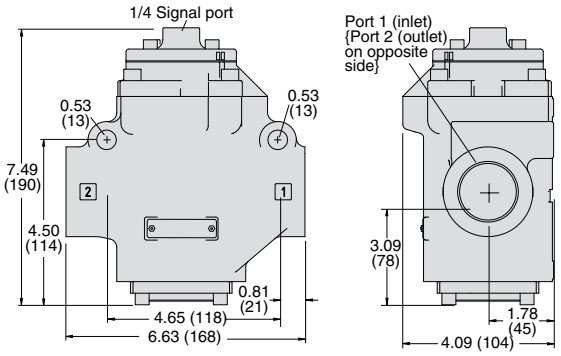

Body Size 2

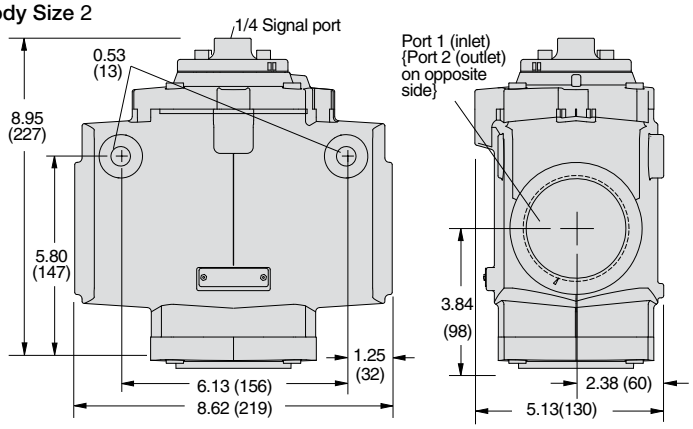

Silencers ordered separately, refer to page D2.23.

STANDARD SPECIFICATIONS (for valves on this page):

Construction Design	Poppet
Mounting Type	In-line
Temperature	**Ambient/Media:** 40° to 175°F (4° to 80°C)
Flow Media	Filtered air
Pilot Supply	External
Operating Pressure	**Body Size 3/8 & 1½:** 15 to 150 psig (1 to 10 bar) **Body Size 2:** 30 to 150 psig (2 to 10 bar) **Pilot Supply** - *Pilot supply pressure must be equal to or greater than inlet pressure.*

Construction Material	**Valve Body:** Cast Aluminum **Poppet:** Acetal and Stainless Steel **Seals:** Buna-N
Safety Integrity Level (SIL) - Certified by TÜV Rheinland in accordance to IEC 61508 and IEC 61511 safety integrity level 2 (SIL 2) and EN ISO 13849-1, PL c (with application specific diagnosis) in singular application with HFT = 0 and SIL 3 and PL e in redundant application with HFT≥1, for details see certificate.	

For ATEX certified valves, consult ROSS.

IMPORTANT NOTE: Please read carefully and thoroughly all of the **CAUTIONS, WARNINGS** on the inside back cover.

© **ROSS** CONTROLS®. All Rights Reserved.

3-Way 2-Position Valves, Spring Return

Port Size 1, 2	Port Size 3	Body Size	Normally Closed Valve Model Number NPT Threads	Normally Closed Valve Model Number G Threads	Normally Open Valve Model Number NPT Threads	Normally Open Valve Model Number G Threads	C_v NC 1-2	C_v NC 2-3	C_v NO 1-2	C_v NO 2-3	M	F NC 1-2	F NC 2-3	F NO 1-2	F NO 2-3	Weight lb (kg)
1/4	1/2	3/8	2753A2001	D2753A2001	2754A2001	D2754A2001	2.5	3.1	2.3	2.7	10	0.90	0.80	0.99	0.88	1.3 (0.6)
3/8	1/2	3/8	2753A3001	D2753A3001	2754A3001	D2754A3001	3.6	5.3	2.8	3.2	10	0.70	0.50	0.90	0.77	1.3 (0.6)
1/2	1/2	3/8	2753A4011	D2753A4011	2754A4011	D2754A4011	3.3	5.3	2.8	3.2	10	0.75	0.50	0.90	0.76	1.3 (0.6)
1/2	1	3/4	2753A4001	D2753A4001	2754A4001	D2754A4001	6.3	9.2	6.3	8.0	12	0.43	0.17	0.46	0.60	2.0 (0.9)
3/4	1	3/4	2753A5001	D2753A5001	2754A5001	D2754A5001	7.7	11	6.9	7.4	12	0.36	0.26	0.45	0.60	2.0 (0.9
1	1	3/4	2753A6011	D2753A6011	2754A6011	D2754A6011	8	12	6.8	7.5	12	0.34	0.25	0.40	0.59	2.0 (0.9
1	1½	1¼	2753A6001	D2753A6001	2754A6001	D2754A6001	23	34	17	24	32	0.17	0.14	0.20	0.17	6.0 (2.7)
1¼	1½	1¼	2753A7001	D2753A7001	2754A7001	D2754A7001	30	32	19	24	32	0.15	0.15	0.19	0.17	6.0 (2.7)
1½	1½	1¼	2753A8011	D2753A8011	2754A8011	D2754A8011	30	31	19	23	32	0.15	0.15	0.19	0.16	6.0 (2.7)
1½	2½	2	2753A8001	D2753A8001	2754A8001	D2754A8001	68	70	57	59	76	0.05	0.04	0.07	0.04	15.3 (6.9)
2	2½	2	2753A9001	D2753A9001	2754A9001	D2754A9001	70	70	58	61	76	0.05	0.04	0.05	0.04	15.3 (6.9)
2½	2½	2	2753A9011	D2753A9011	2754A9011	D2754A9011	70	71	54	55	76	0.05	0.04	0.05	0.04	15.3 (6.9)

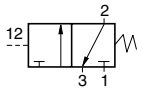

Normally Closed

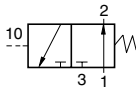

Normally Open

** **Valve Response Time** – Response Time (msec) = M + (F • V). This is the average time required to fill a volume V (cubic inches) to 90% of supply pressure or to exhaust it to 10% of supply pressure. M and F values are shown above.

Valve Dimensions – inches (mm)

Body Size 3/8

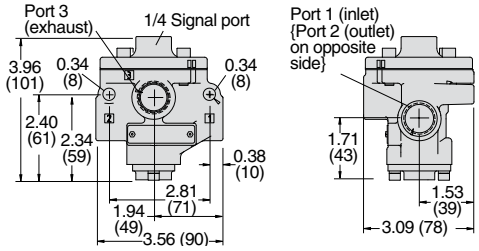

Body Size 3/4

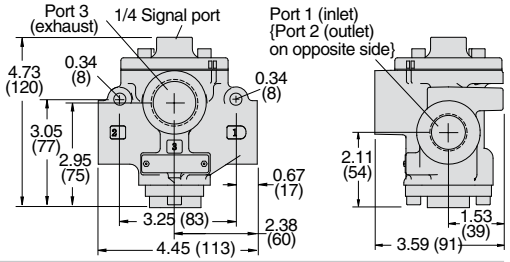

Body Size 1¼

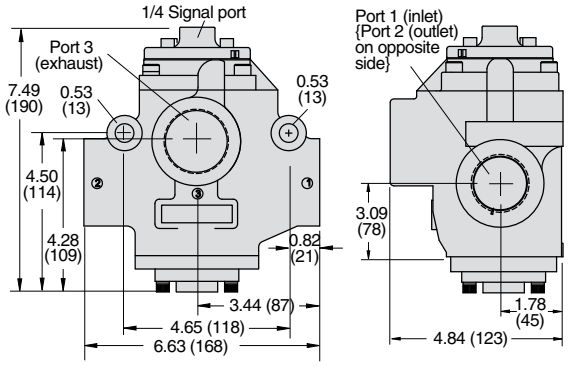

Body Size 2

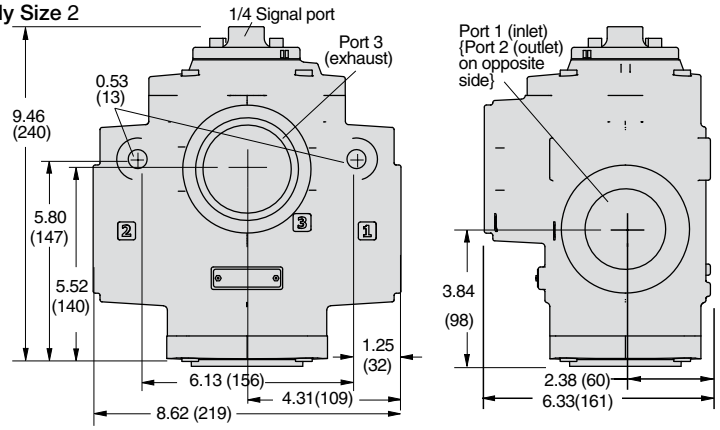

Silencers ordered separately, refer to page D2.23.

STANDARD SPECIFICATIONS (for valves on this page):

Construction Design	Poppet
Mounting Type	In-line
Temperature	**Ambient/Media:** 40° to 175°F (4° to 80°C)
Flow Media	Filtered air
Pilot Supply	External
Operating Pressure	**Body Size 3/8 & 1½:** 15 to 150 psig (1 to 10 bar) **Body Size 2:** 30 to 150 psig (2 to 10 bar)
	Pilot Supply - *Pilot supply pressure must be equal to or greater than inlet pressure.*

Construction Material	**Valve Body:** Cast Aluminum **Poppet:** Acetal and Stainless Steel **Seals:** Buna-N
Safety Integrity Level (SIL) - Certified by TÜV Rheinland in accordance to IEC 61508 and IEC 61511 safety integrity level 2 (SIL 2) and EN ISO 13849-1, PL c (with application specific diagnosis) in singular application with HFT = 0 and SIL 3 and PL e in redundant application with HFT≥1, for details see certificate.	

For ATEX certified valves, consult ROSS.

IMPORTANT NOTE: Please read carefully and thoroughly all of the **CAUTIONS, WARNINGS** on the inside back cover.

D2

D

4-Way 2-Position Valves, Spring Return											
Port Size		Body Size	Valve Model Number		C_v		Average Response Constants**			Weight lb (kg)	
1, 2, 4	3		NPT Threads	G Threads	1-2, 1-4	4-3, 2-3	M	1-2, 1-4	4-3, 2-3		
1/4	1/2	3/8	2756A2001	D2756A2001	2.1	2.9	10	0.92	0.92	1.8 (0.8)	
3/8	1/2	3/8	2756A3001	D2756A3001	2.9	4.2	10	0.90	0.90	1.8 (0.8)	
1/2	1/2	3/8	2756A4011	D2756A4011	3.1	4.3	10	0.89	0.73	1.8 (0.8)	
1/2	1	3/4	2756A4001	D2756A4001	5.6	8.1	26	0.50	0.66	4.3 (1.9)	
3/4	1	3/4	2756A5001	D2756A5001	7.0	9.3	26	0.36	0.55	4.3 (1.9)	
1	1	3/4	2756A6011	D2756A6011	7.8	10	26	0.35	0.50	4.3 (1.9)	
1	1½	1¼	2756A6001	D2756A6001	19	26	79	0.22	0.22	10.3 (4.6)	
1¼	1½	1¼	2756A7001	D2756A7001	21	27	79	0.18	0.18	10.3 (4.6)	
1½	1½	1¼	2756A8011	D2756A8011	22	27	79	0.15	0.15	10.3 (4.6)	

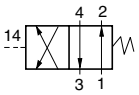

** **Valve Response Time** – Response Time (msec) = M + (F • V). This is the average time required to fill a volume V (cubic inches) to 90% of supply pressure or to exhaust it to 10% of supply pressure. M and F values are shown above.



Valve Dimensions – inches (mm)

Body Size 3/8

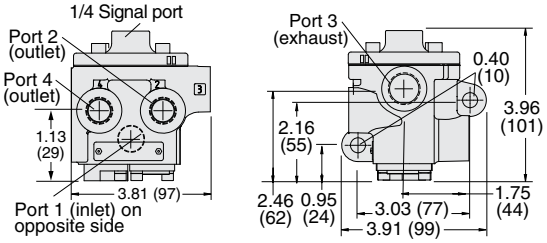

Body Size 3/4

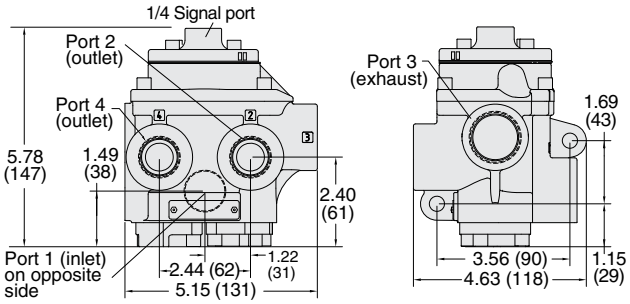

Body Size 1¼

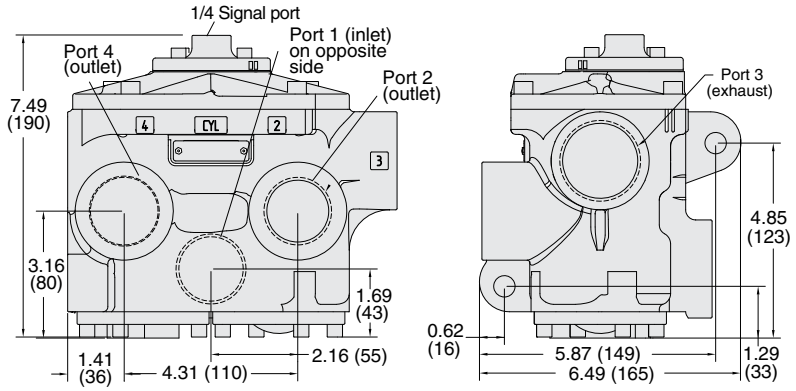

Silencers ordered separately, refer to page D2.23.

STANDARD SPECIFICATIONS (for valves on this page):

Construction Design	Poppet
Mounting Type	In-line
Temperature	**Ambient/Media:** 40° to 175°F (4° to 80°C)
Flow Media	Filtered air
Pilot Supply	External
Operating Pressure	15 to 150 psig (1 to 10 bar) **Pilot Supply** - *Pilot supply pressure must be equal to or greater than inlet pressure.*

Construction Material	**Valve Body:** Cast Aluminum **Poppet:** Acetal and Stainless Steel **Seals:** Buna-N

Safety Integrity Level (SIL) - Certified by TÜV Rheinland in accordance to IEC 61508 and IEC 61511 safety integrity level 2 (SIL 2) and EN ISO 13849-1, PL c (with application specific diagnosis) in singular application with HFT = 0 and SIL 3 and PL e in redundant application with HFT≥1, for details see certificate.

Ex CE

For ATEX certified valves, consult ROSS.

IMPORTANT NOTE: Please read carefully and thoroughly all of the **CAUTIONS, WARNINGS** on the inside back cover.

© **ROSS** CONTROLS®. All Rights Reserved.

Pressure Booster Adaptor: Increases the actuating force on the valve piston. It should be used when the inlet pressure exceeds the available signal pressure, or when the signal pressure is less than 15 psig (1 bar).
The valve's signal pressure is applied to a piston in the pressure booster adaptor that has a larger area than the piston in the valve. The force on the piston in the adaptor is thereby larger than that which could be produced by the piston in the valve. This larger force is applied to the valve's piston directly so that there is then sufficient force to shift the valve properly.

2-Way 2-Position Valves, Spring Return

Port Size	Body Size	Normally Closed Valve Model Number		Normally Open Valve Model Number		C_v		Dimension A inches (mm)	Weight lb (kg)
1, 2		NPT Threads	G Threads	NPT Threads	G Threads	NC	NO		
1/4	3/8	2751A2007	D2751A2007	2752A2007	D2752A2007	2.3	2.3	0.75 (19)	2.3 (1.1)
3/8	3/8	2751A3007	D2751A3007	2752A3007	D2752A3007	3.8	3.3	0.75 (19)	2.3 (1.1)
1/2	3/8	2751A4017	D2751A4017	2752A4017	D2752A4017	4.0	3.5	0.75 (19)	2.3 (1.1)
1/2	3/4	2751A4007	D2751A4007	2752A4007	D2752A4007	7.7	6.5	0.75 (19)	3.0 (1.4)
3/4	3/4	2751A5007	D2751A5007	2752A5007	D2752A5007	9.0	7.3	0.75 (19)	3.0 (1.4)
1	3/4	2751A6017	D2751A6017	2752A6017	D2752A6017	9.0	7.9	0.75 (19)	3.0 (1.4)
1	1¼	2751A6007	D2751A6007	2752A6007	D2752A6007	24	21	1.25 (32)	9.0 (4.1)
1¼	1¼	2751A7007	D2751A7007	2752A7007	D2752A7007	29	20	1.25 (32)	9.0 (4.1)
1½	1¼	2751A8017	D2751A8017	2752A8017	D2752A8017	29	21	1.25 (32)	9.0 (4.1)

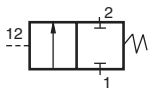

Normally Closed

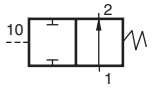

Normally Open

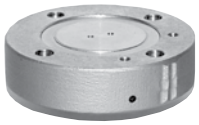
3-way PB Adaptor


4-way PB Adaptor

D2

3-Way 2-Position Valves, Spring Return

Port Size		Body Size	Normally Closed Valve Model Number		Normally Open Valve Model Number		Body Size 3/8 C_v				Dimension A inches (mm)	Weight lb (kg)
							NC		NO			
1, 2	3		NPT Threads	G Threads	NPT Threads	G Threads	1-2	2-3	1-2	2-3		
1/4	1/2	3/8	2753A2007	D2753A2007	2754A2007	D2754A2007	2.5	3.1	2.3	2.7	0.75 (19)	2.3 (1.1)
3/8	1/2	3/8	2753A3007	D2753A3007	2754A3007	D2754A3007	3.6	5.3	28	3.2	0.75 (19)	2.3 (1.1)
1/2	1/2	3/8	2753A4017	D2753A4017	2754A4017	D2754A4017	3.3	5.3	28	3.2	0.75 (19)	2.3 (1.1)
1/2	1	3/4	2753A4007	D2753A4007	2754A4007	D2754A4007	6.3	9.2	6.3	8.0	0.75 (19)	3.0 (1.4)
3/4	1	3/4	2753A5007	D2753A5007	2754A5007	D2754A5007	7.7	11	6.9	7.4	0.75 (19)	3.0 (1.4)
1	1	3/4	2753A6017	D2753A6017	2754A6017	D2754A6017	8	12	6.8	7.5	0.75 (19)	3.0 (1.4)
1	1½	1¼	2753A6007	D2753A6007	2754A6007	D2754A6007	23	34	17	24	1.25 (32)	9.0 (4.1)
1¼	1½	1¼	2753A7007	D2753A7007	2754A7007	D2754A7007	30	32	19	24	1.25 (32)	9.0 (4.1)
1½	1½	1¼	2753A8017	D2753A8017	2754A8017	D2754A8017	30	31	19	23	1.25 (32)	9.0 (4.1)

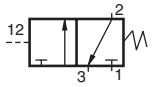

Normally Closed

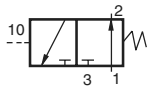

Normally Open

D

4-Way 2-Position Valves, Spring Return

Port Size		Body Size	Valve Model Number		C_v		Dimension A inches (mm)	Weight lb (kg)
1, 2, 4	3		NPT Threads	G Threads	1-2, 1-4	4-3, 2-3		
1/4	1/2	3/8	2756A2007	D2756A2007	2.1	2.9	0.75 (19)	2.8 (1.3)
3/8	1/2	3/8	2756A3007	D2756A3007	2.9	4.2	0.75 (19)	2.8 (1.3)
1/2	1/2	3/8	2756A4017	D2756A4017	3.1	4.3	0.75 (19)	2.8 (1.3)
1/2	1	3/4	2756A4007	D2756A4007	5.6	8.1	0.75 (19)	5.3 (2.4)
3/4	1	3/4	2756A5007	D2756A5007	7.0	9.3	0.75 (19)	5.3 (2.4)
1	1	3/4	2756A6017	D2756A6017	7.8	10	0.75 (19)	5.3 (2.4)
1	1½	1¼	2756A6007	D2756A6007	19	26	1.25 (32)	11.3 (5.2)
1¼	1½	1¼	2756A7007	D2756A7007	21	27	1.25 (32)	11.3 (5.2)
1½	1½	1¼	2756A8017	D2756A8017	22	27	1.25 (32)	11.3 (5.2)

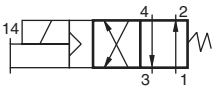

Detailed dimensions, see corresponding valves models pages.

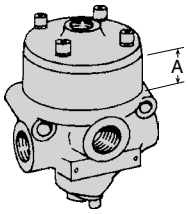

Silencers ordered separately, refer to page D2.23.

STANDARD SPECIFICATIONS (for valves on this page):

Construction Design	Poppet
Mounting Type	In-line
Temperature	**Ambient/Media:** 40° to 175°F (4° to 80°C)
Flow Media	Filtered air
Pilot Supply	External
Operating Pressure	15 to 150 psig (1 to 10 bar) **Pilot Supply** - *Pilot supply pressure must be equal to or greater than inlet pressure.*

Construction Material	**Valve Body:** Cast Aluminum **Poppet:** Acetal and Stainless Steel **Seals:** Buna-N
Safety Integrity Level (SIL) - Certified by TÜV Rheinland in accordance to IEC 61508 and IEC 61511 safety integrity level 2 (SIL 2) and EN ISO 13849-1, PL c (with application specific diagnosis) in singular application with HFT = 0 and SIL 3 and PL e in redundant application with HFT≥1, for details see certificate.	

For ATEX certified valves, consult ROSS.

IMPORTANT NOTE: Please read carefully and thoroughly all of the **CAUTIONS, WARNINGS** on the inside back cover.

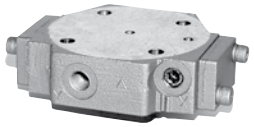

Air Index Adaptor: Allows a valve with a single signal source to function as an impulse controlled, mechanically detented valve.
A momentary pressure signal shifts and holds the valve. A second momentary pressure signal from the same source returns the valve to its original position.

3-Way 2-Position Valves, Spring Return

Port Size		Body Size	Valve Model Number		C_v		Weight lb (kg)
1, 2	3		NPT Threads	G Threads	1-2	2-3	
1/4	1/2	3/8	2783A2001	D2783A2001	2.5	3.1	2.3 (1.1)
3/8	1/2	3/8	2783A3001	D2783A3001	3.6	5.3	2.3 (1.1)
1/2	1/2	3/8	2783A4011	D2783A4011	3.3	5.3	2.3 (1.1)
1/2	1	3/4	2783A4001	D2783A4001	6.3	9.2	3.0 (1.4)
3/4	1	3/4	2783A5001	D2783A5001	7.7	11	3.0 (1.4)
1	1	3/4	2783A6011	D2783A6011	8	12	3.0 (1.4)
1	1½	1¼	2783A6001	D2783A6001	23	34	9.0 (4.1)
1¼	1½	1¼	2783A7001	D2783A7001	30	32	9.0 (4.1)
1½	1½	1¼	2783A8011	D2783A8011	30	31	9.0 (4.1)

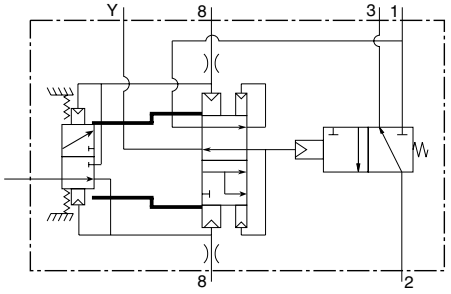

4-Way 2-Position Valves, Spring Return

Port Size		Body Size	Valve Model Number		C_v		Weight lb (kg)
1, 2, 4	3		NPT Threads	G Threads	1-2, 1-4	4-3, 2-3	
1/4	1/2	3/8	2786A2001	D2786A2001	2.1	2.9	2.8 (1.3)
3/8	1/2	3/8	2786A3001	D2786A3001	2.9	4.2	2.8 (1.3)
1/2	1/2	3/8	2786A4011	D2786A4011	3.1	4.3	2.8 (1.3)
1/2	1	3/4	2786A4001	D2786A4001	5.6	8.1	5.3 (2.4)
3/4	1	3/4	2786A5001	D2786A5001	7.0	9.3	5.3 (2.4)
1	1	3/4	2786A6011	D2786A6011	7.8	10	5.3 (2.4)
1	1½	1¼	2786A6001	D2786A6001	19	26	11.3 (5.2)
1¼	1½	1¼	2786A7001	D2786A7001	21	27	11.3 (5.2)
1½	1½	1¼	2786A8011	D2786A8011	22	27	11.3 (5.2)

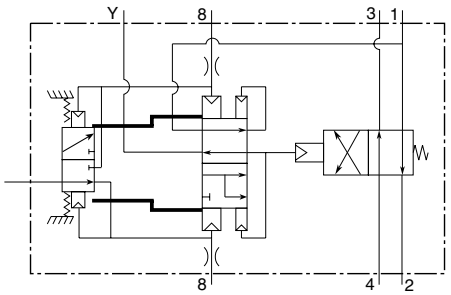

Detailed dimensions, see corresponding valves models pages.

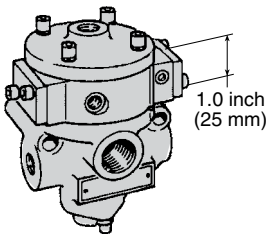

Silencers ordered separately, refer to page D2.23.

STANDARD SPECIFICATIONS (for valves on this page):

Construction Design	Poppet
Mounting Type	In-line
Temperature	**Ambient/Media:** 40° to 175°F (4° to 80°C)
Flow Media	Filtered air
Pilot Supply	External
Operating Pressure	40 to 150 psig (2.8 to 10 bar)
	Pilot Supply - *Pilot supply pressure must be equal to or greater than inlet pressure.*

Construction Material	**Valve Body:** Cast Aluminum **Poppet:** Acetal and Stainless Steel **Seals:** Buna-N
Safety Integrity Level (SIL) - Certified by TÜV Rheinland in accordance to IEC 61508 and IEC 61511 safety integrity level 2 (SIL 2) and EN ISO 13849-1, PL c (with application specific diagnosis) in singular application with HFT = 0 and SIL 3 and PL e in redundant application with HFT≥1, for details see certificate.	

For ATEX certified valves, consult ROSS.

IMPORTANT NOTE: Please read carefully and thoroughly all of the **CAUTIONS, WARNINGS** on the inside back cover.

© **ROSS** CONTROLS®. All Rights Reserved.

Timed Sequence Adaptor: Allows the actuation and/or de-actuation of a valve to be delayed up to 30 seconds for 2/2 valves, and up to 3 seconds for 3/2 and 4/2 valves. The time delay function is controlled by a continuously adjustable tapered needle.



Timed-Out Adaptor



Dual Timed Adaptor

2-Way 2-Position Valves, Spring Return

Port Size	Body Size	Normally Closed Valve Model Number*		Normally Open Valve Model Number*		C_v		Weight lb (kg)
1, 2		Timed In	Timed Out	Timed In	Timed Out	NC	NO	
1/4	3/8	2751A2002	2751A2003	2752A2002	2752A2003	2.3	2.3	2.3 (1.1)
3/8	3/8	2751A3002	2751A3003	2752A3002	2752A3003	3.8	3.3	2.3 (1.1)
1/2	3/8	2751A4012	2751A4013	2752A4012	2752A4013	4.0	3.5	2.3 (1.1)
1/2	3/4	2751A4002	2751A4003	2752A4002	2752A4003	7.7	6.5	3.0 (1.4)
3/4	3/4	2751A5002	2751A5003	2752A5002	2752A5003	9.0	7.3	3.0 (1.4)
1	3/4	2751A6012	2751A6013	2752A6012	2752A6013	9.0	7.9	3.0 (1.4)
1	1¼	2751A6002	2751A6003	2752A6002	2752A6003	24	21	9.0 (4.1)
1¼	1¼	2751A7002	2751A7003	2752A7002	2752A7003	29	20	9.0 (4.1)
1½	1¼	2751A8012	2751A8013	2752A8012	2752A8013	29	21	9.0 (4.1)

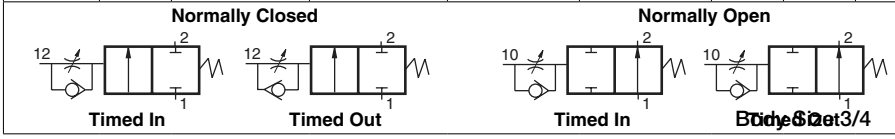

3-Way 2-Position Valves, Spring Return

Port Size		Body Size	Normally Closed Valve Model Number*		Normally Open Valve Model Number*		C_v NC		C_v NO		Weight lb (kg)
1, 2	3		Timed In	Timed Out	Timed In	Timed Out	1-2	2-3	1-2	2-3	
1/4	1/2	3/8	2753A2002	2753A2003	2754A2002	2754A2003	2.5	3.1	2.3	2.7	2.3 (1.1)
3/8	1/2	3/8	2753A3002	2753A3003	2754A3002	2754A3003	3.6	5.3	28	3.2	2.3 (1.1)
1/2	1/2	3/8	2753A4012	2753A4013	2754A4012	2754A4013	3.3	5.3	28	3.2	2.3 (1.1)
1/2	1	3/4	2753A4002	2753A4003	2754A4002	2754A4003	6.3	9.2	6.3	8.0	3.0 (1.4)
3/4	1	3/4	2753A5002	2753A5003	2754A5002	2754A5003	7.7	11	6.9	7.4	3.0 (1.4)
1	1	3/4	2753A6012	2753A6013	2754A6012	2754A6013	8	12	6.8	7.5	3.0 (1.4)
1	1½	1¼	2753A6002	2753A6003	2754A6002	2754A6003	23	34	17	24	9.0 (4.1)
1¼	1½	1¼	2753A7002	2753A7003	2754A7002	2754A7003	30	32	19	24	9.0 (4.1)
1½	1½	1¼	2753A8012	2753A8013	2754A8012	2754A8013	30	31	19	23	9.0 (4.1)

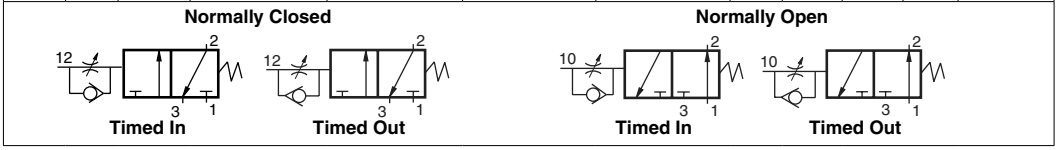

Detailed dimensions, see corresponding valves models pages.

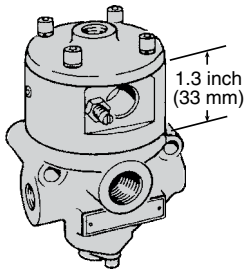

* **NPT port threads.** For G threads add a "D" prefix to the model number e.g., D2751A2002.

OPERATION : **Timed In Adaptor:** Air signal applied; after preset time delay valve is actuated. Air signal removed; valve immediately deactuated.
Timed Out Adaptor: Air signal applied; valve immediately actuated. Air signal removed; after preset delay valve is deactuated.

Silencers ordered separately, refer to page D2.23.

STANDARD SPECIFICATIONS (for valves on this page):

Construction Design	Poppet
Mounting Type	In-line
Temperature	**Ambient/Media:** 40° to 175°F (4° to 80°C)
Flow Media	Filtered air
Pilot Supply	External
Operating Pressure	15 to 150 psig (1 to 10 bar) **Pilot Supply** - *Pilot supply pressure must be equal to or greater than inlet pressure.*

Construction Material	**Valve Body:** Cast Aluminum **Poppet:** Acetal and Stainless Steel **Seals:** Buna-N
Adjustable Time Delay	Up to 30 seconds
Safety Integrity Level (SIL) - Certified by TÜV Rheinland in accordance to IEC 61508 and IEC 61511 safety integrity level 2 (SIL 2) and EN ISO 13849-1, PL c (with application specific diagnosis) in singular application with HFT = 0 and SIL 3 and PL e in redundant application with HFT≥1, for details see certificate.	

For ATEX certified valves, consult ROSS.

IMPORTANT NOTE: Please read carefully and thoroughly all of the **CAUTIONS, WARNINGS** on the inside back cover.

D2

D

2-Way 2-Position Valves, Spring Return

Port Size	Body Size	Normally Closed Valve Model Number*		Normally Open Valve Model Number*		C_v		Weight lb (kg)
1, 2		Timed In	Timed Out	Timed In	Timed Out	NC	NO	
1/4	3/8	2781A2002	2781A2003	2782A2002	2782A2003	2.3	2.3	2.3 (1.1)
3/8	3/8	2781A3002	2781A3003	2782A3002	2782A3003	3.8	3.3	2.3 (1.1)
1/2	3/8	2781A4012	2781A4013	2782A4012	2782A4013	4.0	3.5	2.3 (1.1)
1/2	3/4	2781A4002	2781A4003	2782A4002	2782A4003	7.7	6.5	3.0 (1.4)
3/4	3/4	2781A5002	2781A5003	2782A5002	2782A5003	9.0	7.3	3.0 (1.4)
1	3/4	2781A6012	2781A6013	2782A6012	2782A6013	9.0	7.9	3.0 (1.4)
1	1¼	2781A6002	2781A6003	2782A6002	2782A6003	24	21	9.0 (4.1)
1¼	1¼	2781A7002	2781A7003	2782A7002	2782A7003	29	20	9.0 (4.1)
1½	1¼	2781A8012	2781A8013	2782A8012	2782A8013	29	21	9.0 (4.1)

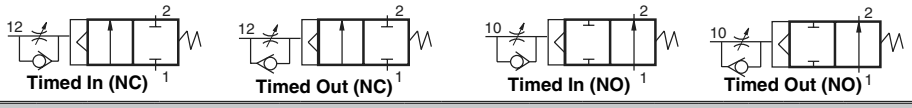

3-Way 2-Position Valves, Spring Return

Port Size		Body Size	Normally Closed Valve Model Number*		Normally Open Valve Model Number*		C_v NC		C_v NO		Weight lb (kg)
1, 2	3		Timed In	Timed Out	Timed In	Timed Out	1-2	2-3	1-2	2-3	
1/4	1/2	3/8	2783A2002	2783A2003	2784A2002	2784A2003	2.5	3.1	2.3	2.7	2.3 (1.1)
3/8	1/2	3/8	2783A3002	2783A3003	2784A3002	2784A3003	3.6	5.3	28	3.2	2.3 (1.1)
1/2	1/2	3/8	2783A4012	2783A4013	2784A4012	2784A4013	3.3	5.3	28	3.2	2.3 (1.1)
1/2	1	3/4	2783A4002	2783A4003	2784A4002	2784A4003	6.3	9.2	6.3	8.0	3.0 (1.4)
3/4	1	3/4	2783A5002	2783A5003	2784A5002	2784A5003	7.7	11	6.9	7.4	3.0 (1.4)
1	1	3/4	2783A6012	2783A6013	2784A6012	2784A6013	8	12	6.8	7.5	3.0 (1.4)
1	1½	1¼	2783A6002	2783A6003	2784A6002	2784A6003	23	34	17	24	9.0 (4.1)
1¼	1½	1¼	2783A7002	2783A7003	2784A7002	2784A7003	30	32	19	24	9.0 (4.1)
1½	1½	1¼	2783A8012	2783A8013	2784A8012	2784A8013	30	31	19	23	9.0 (4.1)

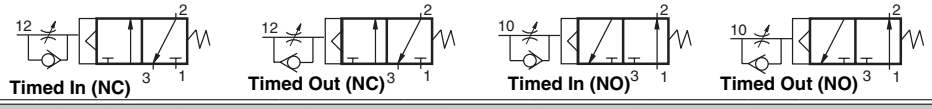

4-Way 2-Position Valves, Spring Return

Port Size		Body Size	Valve Model Number*		C_v		Weight lb (kg)
1, 2, 4	3		Timed In	Timed Out	1-2, 1-4	4-3, 2-3	
1/4	1/2	3/8	2786A2002	2786A2003	2.1	2.9	2.8 (1.3)
3/8	1/2	3/8	2786A3002	2786A3003	2.9	4.2	2.8 (1.3)
1/2	1/2	3/8	2786A4012	2786A4013	3.1	4.3	2.8 (1.3)
1/2	1	3/4	2786A4002	2786A4003	5.6	8.1	5.3 (2.4)
3/4	1	3/4	2786A5002	2786A5003	7.0	9.3	5.3 (2.4)
1	1	3/4	2786A6012	2786A6013	7.8	10	5.3 (2.4)
1	1½	1¼	2786A6002	2786A6003	19	26	11.3 (5.2)
1¼	1½	1¼	2786A7002	2786A7003	21	27	11.3 (5.2)
1½	1½	1¼	2786A8012	2786A8013	22	27	11.3 (5.2)

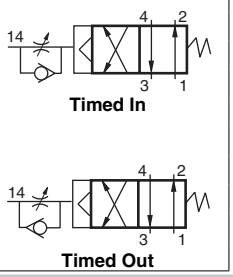

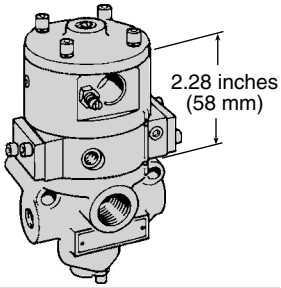



Timed Sequence Adaptor: Allows the actuation and/or de-actuation of a valve to be delayed up to 30 seconds for 2/2 valves, and up to 3 seconds for 3/2 and 4/2 valves. The time delay function is controlled by a continuously adjustable tapered needle. Longer time delays can be obtained by using this adaptor in conjunction with the timed sequence extension adaptor.

Timed Sequence Extension Adaptor: Used in conjunction with the timed sequence adaptor to extend the delay interval up to 60 seconds. It also helps to obtain "snap" action of the valve by keeping pilot or signal air off the main valve piston until the pressure has built high enough to cause prompt valve response. Air line lubrication is required with this adaptor.

Detailed dimensions, see corresponding valves models pages.

* **NPT port threads.** For G threads add a "D" prefix to the model number e.g., D2781B2002.

Silencers ordered separately, refer to page D2.23.

STANDARD SPECIFICATIONS (for valves on this page):

Construction Design	Poppet
Mounting Type	In-line
Temperature	**Ambient/Media:** 40° to 175°F (4° to 80°C)
Flow Media	Filtered air
Pilot Supply	External
Operating Pressure	15 to 150 psig (1 to 10 bar) **Pilot Supply** - *Pilot supply pressure must be equal to or greater than inlet pressure.*

Construction Material	**Valve Body:** Cast Aluminum **Poppet:** Acetal and Stainless Steel **Seals:** Buna-N
Adjustable Time Delay	Up to 60 seconds
Safety Integrity Level (SIL) - Certified by TÜV Rheinland in accordance to IEC 61508 and IEC 61511 safety integrity level 2 (SIL 2) and EN ISO 13849-1, PL c (with application specific diagnosis) in singular application with HFT = 0 and SIL 3 and PL e in redundant application with HFT≥1, for details see certificate.	

For ATEX certified valves, consult ROSS.

IMPORTANT NOTE: Please read carefully and thoroughly all of the **CAUTIONS, WARNINGS** on the inside back cover.

© ROSS CONTROLS®. All Rights Reserved.

Timed Sequence Adaptor: Allows the actuation and/or de-actuation of a valve to be delayed up to 30 seconds for 2/2 valves, and up to 3 seconds for 3/2 and 4/2 valves. The time delay function is controlled by a continuously adjustable tapered needle.



2-Way 2-Position Valves, Spring Return

Port Size	Body Size	Normally Closed Valve Model Number		Normally Open Valve Model Number		C_v		Weight lb (kg)
1, 2		NPT Threads	G Threads	NPT Threads	G Threads	NC	NO	
1/4	3/8	2751B2008	D2751B2008	2752B2008	D2752B2008	2.3	2.3	2.3 (1.1)
3/8	3/8	2751B3008	D2751B3008	2752B3008	D2752B3008	3.8	3.3	2.3 (1.1)
1/2	3/8	2751B4018	D2751B4018	2752B4018	D2752B4018	4.0	3.5	2.3 (1.1)
1/2	3/4	2751B4008	D2751B4008	2752B4008	D2752B4008	7.7	6.5	3.0 (1.4)
3/4	3/4	2751B5008	D2751B5008	2752B5008	D2752B5008	9.0	7.3	3.0 (1.4)
1	3/4	2751B6018	D2751B6018	2752B6018	D2752B6018	9.0	7.9	3.0 (1.4)
1	1¼	2751B6008	D2751B6008	2752B6008	D2752B6008	24	21	9.0 (4.1)
1¼	1¼	2751B7008	D2751B7008	2752B7008	D2752B7008	29	20	9.0 (4.1)
1½	1¼	2751B8018	D2751B8018	2752B8018	D2752B8018	29	21	9.0 (4.1)

Normally Closed

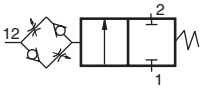

Normally Open

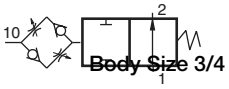

Body Size 3/4

3-Way 2-Position Valves, Spring Return

Port Size		Body Size	Normally Closed Valve Model Number		Normally Open Valve Model Number		C_v				Weight lb (kg)
							NC		NO		
1, 2	3		NPT Threads	G Threads	NPT Threads	G Threads	1-2	2-3	1-2	2-3	
1/4	1/2	3/8	2753B2008	D2753B2008	2754B2008	D2754B2008	2.5	3.1	2.3	2.7	2.3 (1.1)
3/8	1/2	3/8	2753B3008	D2753B3008	2754B3008	D2754B3008	3.6	5.3	28	3.2	2.3 (1.1)
1/2	1/2	3/8	2753B4018	D2753B4018	2754B4018	D2754B4018	3.3	5.3	28	3.2	2.3 (1.1)
1/2	1	3/4	2753B4008	D2753B4008	2754B4008	D2754B4008	6.3	9.2	6.3	8.0	3.0 (1.4)
3/4	1	3/4	2753B5008	D2753B5008	2754B5008	D2754B5008	7.7	11	6.9	7.4	3.0 (1.4)
1	1	3/4	2753B6018	D2753B6018	2754A6018	D2754A6018	8	12	6.8	7.5	3.0 (1.4)
1	1½	1¼	2753B6008	D2753B6008	2754B6008	D2754B6008	23	34	17	24	9.0 (4.1)
1¼	1½	1¼	2753B7008	D2753B7008	2754B7008	D2754B7008	30	32	19	24	9.0 (4.1)
1½	1½	1¼	2753B8018	D2753B8018	2754B8018	D2754B8018	30	31	19	23	9.0 (4.1)

Normally Closed

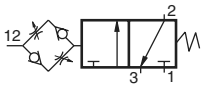

Normally Open

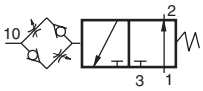

Detailed dimensions, see corresponding valves models pages.

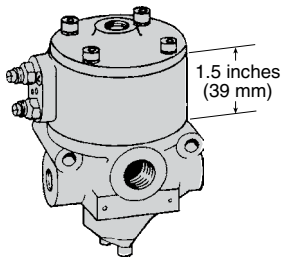

OPERATION :

Timed In Adaptor: Air signal applied; after preset time delay valve is actuated. Air signal removed; valve immediately deactuated.

Timed Out Adaptor: Air signal applied; valve immediately actuated. Air signal removed; after preset delay valve is deactuated.

Silencers ordered separately, refer to page D2.23.

STANDARD SPECIFICATIONS (for valves on this page):

Construction Design	Poppet
Mounting Type	In-line
Temperature	**Ambient/Media:** 40° to 175°F (4° to 80°C)
Flow Media	Filtered air
Pressure - Inlet	15 to 150 psig (1 to 10 bar)
Pilot Supply	External

Operating Pressure	15 to 150 psig (1 to 10 bar)
	Pilot Supply - *Pilot supply pressure must be equal to or greater than inlet pressure.*
Adjustable Time Delay	Up to 30 seconds
Safety Integrity Level (SIL) - Certified by TÜV Rheinland in accordance to IEC 61508 and IEC 61511 safety integrity level 2 (SIL 2) and EN ISO 13849-1, PL c (with application specific diagnosis) in singular application with HFT = 0 and SIL 3 and PL e in redundant application with HFT≥1, for details see certificate.	

For ATEX certified valves, consult ROSS.

IMPORTANT NOTE: Please read carefully and thoroughly all of the **CAUTIONS, WARNINGS** on the inside back cover.

Timed-In/Out Sequence & Timed Sequence Extension Adaptors: Used in conjunction can increase the time delay interval up to 60 seconds. It also helps to obtain "snap" action of the valve. By keeping pilot air off the main valve piston until the pressure has built high enough to ensure prompt valve response, the timed sequence extension adaptor prevents the piston from creeping.





2-Way 2-Position Valves, Spring Return

Port Size	Body Size	Normally Closed Valve Model Number		Normally Open Valve Model Number		C_v		Weight lb (kg)
1, 2		NPT Threads	G Threads	NPT Threads	G Threads	NC	NO	
1/4	3/8	2781B2005	D2781B2005	2782B2005	D2782B2005	2.3	2.3	2.3 (1.1)
3/8	3/8	2781B3005	D2781B3005	2782B3005	D2782B3005	3.8	3.3	2.3 (1.1)
1/2	3/8	2781B4015	D2781B4015	2782B4015	D2782B4015	4.0	3.5	2.3 (1.1)
1/2	3/4	2781B4005	D2781B4005	2782B4005	D2782B4005	7.7	6.5	3.0 (1.4)
3/4	3/4	2781B5005	D2781B5005	2782B5005	D2782B5005	9.0	7.3	3.0 (1.4)
1	3/4	2781B6015	D2781B6015	2782B6015	D2782B6015	9.0	7.9	3.0 (1.4)
1	1¼	2781B6005	D2781B6005	2782B6005	D2782B6005	24	21	9.0 (4.1)
1¼	1¼	2781B7005	D2781B7005	2782B7005	D2782B7005	29	20	9.0 (4.1)
1½	1¼	2781B8015	D2781B8015	2782B8015	D2782B8015	29	21	9.0 (4.1)

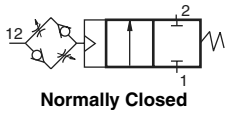

Normally Closed

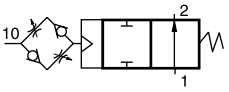

Normally Open

3-Way 2-Position Valves, Spring Return

Port Size		Body Size	Normally Closed Valve Model Number		Normally Open Valve Model Number		C_v NC		C_v NO		Weight lb (kg)
1, 2	3		NPT Threads	G Threads	NPT Threads	G Threads	1-2	2-3	1-2	2-3	
1/4	1/2	3/8	2783B2005	D2783B2005	2784B2005	D2784B2005	2.5	3.1	2.3	2.7	2.3 (1.1)
3/8	1/2	3/8	2783B3005	D2783B3005	2784B3005	D2784B3005	3.6	5.3	28	3.2	2.3 (1.1)
1/2	1/2	3/8	2783B4015	D2783B4015	2784B4015	D2784B4015	3.3	5.3	28	3.2	2.3 (1.1)
1/2	1	3/4	2783B4005	D2783B4005	2784B4005	D2784B4005	6.3	9.2	6.3	8.0	3.0 (1.4)
3/4	1	3/4	2783B5005	D2783B5005	2784B5005	D2784B5005	7.7	11	6.9	7.4	3.0 (1.4)
1	1	3/4	2783B6015	D2783B6015	2784B6015	D2784B6015	8	12	6.8	7.5	3.0 (1.4)
1	1½	1¼	2783B6005	D2783B6005	2784B6005	D2784B6005	23	34	17	24	9.0 (4.1)
1¼	1½	1¼	2783B7005	D2783B7005	2784B7005	D2784B7005	30	32	19	24	9.0 (4.1)
1½	1½	1¼	2783B8015	D2783B8015	2784B8015	D2784B8015	30	31	19	23	9.0 (4.1)

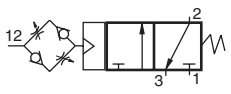

Normally Closed

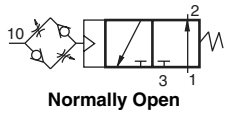

Normally Open

4-Way 2-Position Valves, Spring Return

Port Size		Body Size	Valve Model Number		C_v		Weight lb (kg)
1, 2, 4	3		NPT Threads	G Threads	1-2, 1-4	4-3, 2-3	
1/4	1/2	3/8	2786B2005	D2786B2005	2.1	2.9	2.8 (1.3)
3/8	1/2	3/8	2786B3005	D2786B3005	2.9	4.2	2.8 (1.3)
1/2	1/2	3/8	2786B4015	D2786B4015	3.1	4.3	2.8 (1.3)
1/2	1	3/4	2786B4005	D2786B4005	5.6	8.1	5.3 (2.4)
3/4	1	3/4	2786B5005	D2786B5005	7.0	9.3	5.3 (2.4)
1	1	3/4	2786B6015	D2786B6015	7.8	10	5.3 (2.4)
1	1½	1¼	2786B6005	D2786B6005	19	26	11.3 (5.2)
1¼	1½	1¼	2786B7005	D2786B7005	21	27	11.3 (5.2)
1½	1½	1¼	2786B8015	D2786B8015	22	27	11.3 (5.2)

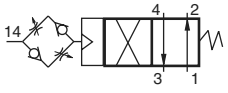

Detailed dimensions, see corresponding valves models pages.

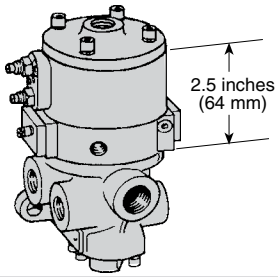

Silencers ordered separately, refer to page D2.23.

STANDARD SPECIFICATIONS (for valves on this page):

Construction Design	Poppet
Mounting Type	In-line
Temperature	**Ambient/Media:** 40° to 175°F (4° to 80°C)
Flow Media	Filtered air
Pilot Supply	Internal or External
Operating Pressure	15 to 150 psig (1 to 10 bar) **Pilot Supply** - *Pilot supply pressure must be equal to or greater than inlet pressure.*

Construction Material	**Valve Body:** Cast Aluminum **Poppet:** Acetal and Stainless Steel **Seals:** Buna-N
Adjustable Time Delay	Up to 60 seconds

Safety Integrity Level (SIL) - Certified by TÜV Rheinland in accordance to IEC 61508 and IEC 61511 safety integrity level 2 (SIL 2) and EN ISO 13849-1, PL c (with application specific diagnosis) in singular application with HFT = 0 and SIL 3 and PL e in redundant application with HFT≥1, for details see certificate.

Ex CE

For ATEX certified valves, consult ROSS.

IMPORTANT NOTE: Please read carefully and thoroughly all of the **CAUTIONS, WARNINGS** on the inside back cover.

© **ROSS** CONTROLS®. All Rights Reserved.

Inlet Port Controlled Timed-In Sequence Adaptor: Permits valve actuation and deactuation to be controlled by the pressure at the inlet port. When pressure is applied an internal passage conducts the pressure to the sequence adaptor. After the preset time delay, the valve is actuated. When pressure is removed from the inlet port the valve is deactuated.



2-Way 2-Position Valves, Spring Return

Port Size	Body Size	Normally Closed Valve Model Number		Normally Open Valve Model Number		C_v		Weight lb (kg)
1, 2		NPT Threads	G Threads	NPT Threads	G Threads	NC	NO	
1/4	3/8	2751A2004	D2751A2004	2752A2004	D2752A2004	2.3	2.3	2.3 (1.1)
3/8	3/8	2751A3004	D2751A3004	2752A3004	D2752A3004	3.8	3.3	2.3 (1.1)
1/2	3/8	2751A4014	D2751A4014	2752A4014	D2752A4014	4.0	3.5	2.3 (1.1)
1/2	3/4	2751A4004	D2751A4004	2752A4004	D2752A4004	7.7	6.5	3.0 (1.4)
3/4	3/4	2751A5004	D2751A5004	2752A5004	D2752A5004	9.0	7.3	3.0 (1.4)
1	3/4	2751A6014	D2751A6014	2752A6014	D2752A6014	9.0	7.9	3.0 (1.4)
1	1¼	2751A6004	D2751A6004	2752A6004	D2752A6004	24	21	9.0 (4.1)
1¼	1¼	2751A7004	D2751A7004	2752A7004	D2752A7004	29	20	9.0 (4.1)
1½	1¼	2751A8014	D2751A8014	2752A8014	2752A8014	29	21	9.0 (4.1)

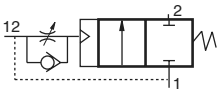

Normally Closed

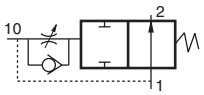

Normally Open

3-Way 2-Position Valves, Spring Return

Port Size		Body Size	Normally Closed Valve Model Number		Normally Open Valve Model Number		C_v Body Size 3/4				Weight lb (kg)
							NC		NO		
1, 2	3		NPT Threads	G Threads	NPT Threads	G Threads	1-2	2-3	1-2	2-3	
1/4	1/2	3/8	2753A2004	D2753A2004	2754A2004	D2753A2004	2.5	3.1	2.3	2.7	2.3 (1.1)
3/8	1/2	3/8	2753A3004	D2753A3004	2754A3004	D2753A3004	3.6	5.3	28	3.2	2.3 (1.1)
1/2	1/2	3/8	2753A4014	D2753A4014	2754A4014	D2753A4014	3.3	5.3	28	3.2	2.3 (1.1)
1/2	1	3/4	2753A4004	D2753A4004	2754A4004	D2753A4004	6.3	9.2	6.3	8.0	3.0 (1.4)
3/4	1	3/4	2753A5004	D2753A5004	2754A5004	D2753A5004	7.7	11	6.9	7.4	3.0 (1.4)
1	1	3/4	2753A6014	D2753A6014	2754A6014	D2753A6014	8	12	6.8	7.5	3.0 (1.4)
1	1½	1¼	2753A6004	D2753A6004	2754A6004	D2753A6004	23	34	17	24	9.0 (4.1)
1¼	1½	1¼	2753A7004	D2753A7004	2754A7004	D2753A7004	30	32	19	24	9.0 (4.1)
1½	1½	1¼	2753A8014	D2753A8014	2754A8014	D2753A8014	30	31	19	23	9.0 (4.1)

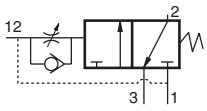

Normally Closed

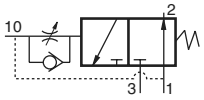

Normally Open

4-Way 2-Position Valves, Spring Return

Port Size		Body Size	Valve Model Number		C_v		Weight lb (kg)
1, 2, 4	3		NPT Threads	G Threads	1-2, 1-4	4-3, 2-3	
1/4	1/2	3/8	2756A2004	D2756A2004	2.1	2.9	2.8 (1.3)
3/8	1/2	3/8	2756A3004	D2756A3004	2.9	4.2	2.8 (1.3)
1/2	1/2	3/8	2756A4014	D2756A4014	3.1	4.3	2.8 (1.3)
1/2	1	3/4	2756A4004	D2756A4004	5.6	8.1	5.3 (2.4)
3/4	1	3/4	2756A5004	D2756A5004	7.0	9.3	5.3 (2.4)
1	1	3/4	2756A6014	D2756A6014	7.8	10	5.3 (2.4)
1	1½	1¼	2756A6004	D2756A6004	19	26	11.3 (5.2)
1¼	1½	1¼	2756A7004	D2756A7004	21	27	11.3 (5.2)
1½	1½	1¼	2756A8014	D2756A8014	22	27	11.3 (5.2)

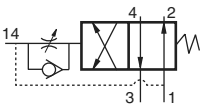

Detailed dimensions, see corresponding valves models pages.

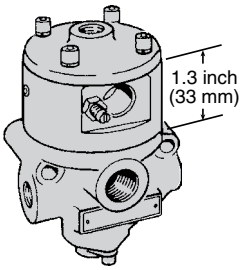

Silencers ordered separately, refer to page D2.23.

STANDARD SPECIFICATIONS (for valves on this page):

Construction Design	Poppet
Mounting Type	In-line
Temperature	**Ambient/Media:** 40° to 175°F (4° to 80°C)
Flow Media	Filtered air
Pilot Supply	External
Operating Pressure	15 to 150 psig (1 to 10 bar) **Pilot Supply** - *Pilot supply pressure must be equal to or greater than inlet pressure.*

Construction Material	**Valve Body:** Cast Aluminum **Poppet:** Acetal and Stainless Steel **Seals:** Buna-N
Adjustable Time Delay	**2/2 Valves:** Up to 30 seconds **3/2, 4/2 Valves:** Up to 3 seconds
Safety Integrity Level (SIL) - Certified by TÜV Rheinland in accordance to IEC 61508 and IEC 61511 safety integrity level 2 (SIL 2) and EN ISO 13849-1, PL c (with application specific diagnosis) in singular application with HFT = 0 and SIL 3 and PL e in redundant application with HFT≥1, for details see certificate.	

For ATEX certified valves, consult ROSS.

IMPORTANT NOTE: Please read carefully and thoroughly all of the **CAUTIONS, WARNINGS** on the inside back cover.

Directional Control Valves – Pressure Controlled
with Inlet Port Controlled Timed-In Sequence & Timed Sequence Extension Adaptors 27 Series

Inlet Port Controlled Timed-In Sequence Adaptor: Permits valve actuation and deactuation to be controlled by the pressure at the inlet port. When pressure is applied an internal passage conducts the pressure to the sequence adaptor. After the preset time delay, the valve is actuated. When pressure is removed from the inlet port the valve is deactuated.
Timed Sequence Extension Adaptor: Increases the maximum time delay interval to 60 seconds. It also helps to obtain "snap" action of the valve. By keeping pressure off the main valve piston until it is high enough to ensure prompt valve response, the timed sequence extension adaptor prevents the piston from creeping.





D2

2-Way 2-Position Valves, Spring Return

Port Size	Body Size	Normally Closed Valve Model Number		Normally Open Valve Model Number		C_v		Weight lb (kg)
1, 2		NPT Threads	G Threads	NPT Threads	G Threads	NC	NO	
1/4	3/8	2781A2004	D2781A2004	2782A2004	D2782A2004	2.3	2.3	2.3 (1.1)
3/8	3/8	2781A3004	D2781A3004	2782A3004	D2782A3004	3.8	3.3	2.3 (1.1)
1/2	3/8	2781A4014	D2781A4014	2782A4014	D2782A4014	4.0	3.5	2.3 (1.1)
1/2	3/4	2781A4004	D2781A4004	2782A4004	D2782A4004	7.7	6.5	3.0 (1.4)
3/4	3/4	2781A5004	D2781A5004	2782A5004	D2782A5004	9.0	7.3	3.0 (1.4)
1	3/4	2781A6014	D2781A6014	2782A6014	D2782A6014	9.0	7.9	3.0 (1.4)
1	1¼	2781A6004	D2781A6004	2782A6004	D2782A6004	24	21	9.0 (4.1)
1¼	1¼	2781A7004	D2781A7004	2782A7004	D2782A7004	29	20	9.0 (4.1)
1½	1¼	2781A8014	D2781A8014	2782A8014	D2782A8014	29	21	9.0 (4.1)

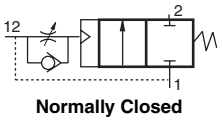

Normally Closed

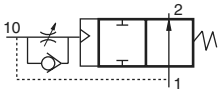

Normally Open

D

3-Way 2-Position Valves, Spring Return

Port Size		Body Size	Normally Closed Valve Model Number		Normally Open Valve Model Number		C_v NC		C_v NO		Weight lb (kg)
1, 2	3		NPT Threads	G Threads	NPT Threads	G Threads	1-2	2-3	1-2	2-3	
1/4	1/2	3/8	2783A2004	D2783A2004	2784A2004	D2784A2004	2.5	3.1	2.3	2.7	2.3 (1.1)
3/8	1/2	3/8	2783A3004	D2783A3004	2784A3004	D2784A3004	3.6	5.3	28	3.2	2.3 (1.1)
1/2	1/2	3/8	2783A4014	D2783A4014	2784A4014	D2784A4014	3.3	5.3	28	3.2	2.3 (1.1)
1/2	1	3/4	2783A4004	D2783A4004	2784A4004	D2784A4004	6.3	9.2	6.3	8.0	3.0 (1.4)
3/4	1	3/4	2783A5004	D2783A5004	2784A5004	D2784A5004	7.7	11	6.9	7.4	3.0 (1.4)
1	1	3/4	2783A6014	D2783A6014	2784A6014	D2784A6014	8	12	6.8	7.5	3.0 (1.4)
1	1½	1¼	2783A6004	D2783A6004	2784A6004	D2784A6004	23	34	17	24	9.0 (4.1)
1¼	1½	1¼	2783A7004	D2783A7004	2784A7004	D2784A7004	30	32	19	24	9.0 (4.1)
1½	1½	1¼	2783A8014	D2783A8014	2784A8014	D2784A8014	30	31	19	23	9.0 (4.1)

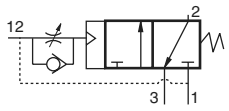

Normally Closed

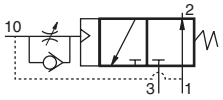

Normally Open

4-Way 2-Position Valves, Spring Return

Port Size		Body Size	Valve Model Number		C_v		Weight lb (kg)
1, 2, 4	3		NPT Threads	G Threads	1-2, 1-4	4-3, 2-3	
1/4	1/2	3/8	2786A2004	D2786A2004	2.1	2.9	2.8 (1.3)
3/8	1/2	3/8	2786A3004	D2786A3004	2.9	4.2	2.8 (1.3)
1/2	1/2	3/8	2786A4014	D2786A4014	3.1	4.3	2.8 (1.3)
1/2	1	3/4	2786A4004	D2786A4004	5.6	8.1	5.3 (2.4)
3/4	1	3/4	2786A5004	D2786A5004	7.0	9.3	5.3 (2.4)
1	1	3/4	2786A6014	D2786A6014	7.8	10	5.3 (2.4)
1	1½	1¼	2786A6004	D2786A6004	19	26	11.3 (5.2)
1¼	1½	1¼	2786A7004	D2786A7004	21	27	11.3 (5.2)
1½	1½	1¼	2786A8014	D2786A8014	22	27	11.3 (5.2)

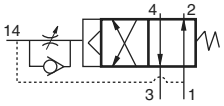

Detailed dimensions, see corresponding valves models pages.

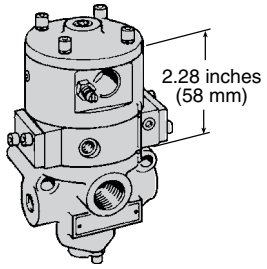

Silencers ordered separately, refer to page D2.23.

STANDARD SPECIFICATIONS (for valves on this page):

Construction Design	Poppet
Mounting Type	In-line
Temperature	**Ambient/Media:** 40° to 175°F (4° to 80°C)
Flow Media	Filtered air
Pilot Supply	External
Operating Pressure	15 to 150 psig (1 to 10 bar) **Pilot Supply -** *Pilot supply pressure must be equal to or greater than inlet pressure.*

Construction Material	**Valve Body:** Cast Aluminum **Poppet:** Acetal and Stainless Steel **Seals:** Buna-N
Adjustable Time Delay	Up to 60 seconds
Safety Integrity Level (SIL) - Certified by TÜV Rheinland in accordance to IEC 61508 and IEC 61511 safety integrity level 2 (SIL 2) and EN ISO 13849-1, PL c (with application specific diagnosis) in singular application with HFT = 0 and SIL 3 and PL e in redundant application with HFT≥1, for details see certificate.	

For ATEX certified valves, consult ROSS.

IMPORTANT NOTE: Please read carefully and thoroughly all of the **CAUTIONS, WARNINGS** on the inside back cover.

© ROSS CONTROLS®. All Rights Reserved.

Indicator Light Kits

To visually verify valve operation indicator lights are available in kit form. The indicator light extends through the solenoid or pilot cover and is illuminated when the solenoid is energized. Such lights are standard on double solenoid valves.

Indicator light kits are available for single solenoid models.

Kit Number		
24 volts DC	110-120 volts AC 50-60 Hz	220 volts 50-60 Hz
862K87-W	862K87-Z	862K87-Y

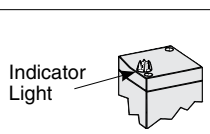

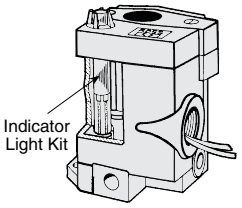

Manual Override Kits

Flush flexible manual overrides are standard on single solenoid models. Double solenoid models have flush metal-button overrides. Both types are non-locking.

Each of the buttons in the override kits below is made of metal and is spring-returned. The locking type button, however, can be kept in the actuated position by turning the slot in the top of the button with a screwdriver.

Flush Button	
Locking Type	Kit Number
Non-Locking	790K87
Locking	792K87



Extended Button	
Locking Type	Kit Number
Non-Locking	791K87



Extended Button with Palm	
Locking Type	Kit Number
Non-Locking	984H87



Electrical Connector

Valves available with installed prewired connectors, consult ROSS.

System 8 Solenoid Pilot

Models available with preinstalled System 8 solenoid pilot, consult ROSS.

Silencers

Port Size	Thread Type	Model Number		Avg. C_v	Dimensions inches (mm)		Weight lb (kg)
		NPT Threads	R/Rp Threads		Width	Length	
1/2	Male	5500A4003	D5500A4003	4.7	1.3 (32)	3.6 (91)	0.2 (0.1)
1	Male	5500A6003	D5500A6003	14.6	2.0 (51)	5.4 (138)	0.6 (0.3)
1½	Female	5500A8001	D5500A8001	29.9	2.5 (64)	5.7 (144)	1.0 (0.5)
2½	Female	5500A9002	D5500A9002	103.7	4.0 (102)	5.7 (145)	2.9 (1.4)

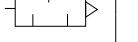

Pressure Range: 0 to 290 psig (0 to 20 bar) maximum.
Flow Media: Filtered air.

Port size 1/4 thru 2



Port size 2½



CAUTIONS, WARNINGS And STANDARD WARRANTY

ROSS OPERATING VALVE, ROSS CONTROLS®, ROSS DECCO®, and AUTOMATIC VALVE INDUSTRIAL, collectively the "ROSS Group".

PRE-INSTALLATION or SERVICE

1. Before servicing a valve or other pneumatic component, be sure all sources of energy are turned off, the entire pneumatic system is shut down and exhausted, and all power sources are locked out (ref: OSHA 1910.147, EN 1037).

2. All ROSS Group Products, including service kits and parts, should be installed and/or serviced only by persons having training and experience with pneumatic equipment. Because any product can be tampered with and/or need servicing after installation, persons responsible for the safety of others or the care of equipment must check ROSS Group Products on a regular basis and perform all necessary maintenance to ensure safe operating conditions.

3. All applicable instructions should be read and complied with before using any fluid power system to prevent harm to persons or equipment. In addition, overhauled or serviced valves must be functionally tested prior to installation and use. If you have any questions, call your nearest ROSS Group location.

4. Each ROSS Group Product should be used within its specification limits. In addition, use only ROSS Group components to repair ROSS Group Products.

WARNINGS: Failure to follow these instructions can result in personal injury and/or property damage.

FILTRATION and LUBRICATION

1. Dirt, scale, moisture, etc., are present in virtually every air system. Although some valves are more tolerant of these contaminants than others, best performance will be realized if a filter is installed to clean the air supply, thus preventing contaminants from interfering with the proper performance of the equipment. The ROSS Group recommends a filter with a 5-micron rating for normal applications.

2. All standard ROSS Group filters and lubricators with polycarbonate plastic bowls are designed for compressed air applications only. Use the metal bowl guard, where provided, to minimize danger from high pressure fragmentation in the event of bowl failure. Do not expose these products to certain fluids, such as alcohol or liquefied petroleum gas, as they can cause bowls to rupture, creating a combustible condition and hazardous leakage. Immediately replace crazed, cracked, or deteriorated bowls.

3. Only use lubricants which are compatible with materials used in the valves and other components in the system. Normally, compatible lubricants are petroleum base oils with oxidation inhibitors, an aniline point between 180°F (82°C) and 220°F (104°C), and an ISO 32, or lighter, viscosity. Avoid oils with phosphate type additives which can harm polyurethane components, potentially leading to valve failure which risks personal injury, and/or damage to property.

WARNINGS: Failure to follow these instructions can result in personal injury and/or property damage.

AVOID INTAKE/EXHAUST RESTRICTION

1. Do not restrict air flow in the supply line. To do so could reduce the pressure of the supply air below minimum requirements for the valve and thereby causing erratic action.

2. Do not restrict a valve's exhaust port as this can adversely affect its operation. Exhaust silencers must be resistant to clogging and must have flow capacities at least as great as the exhaust capacities of the valves. Contamination of the silencer can result in reduced flow and increased back pressure.

WARNINGS: Failure to follow these instructions can result in personal injury and/or property damage.

SAFETY APPLICATIONS

1. Mechanical Power Presses and other potentially hazardous machinery using a pneumatically controlled clutch and brake mechanism must use a press control double valve with a monitoring device. A double valve without a self-contained monitoring device should be used only in conjunction with a control system which assures monitoring of the valve. All double valve installations involving hazardous applications should incorporate a monitoring system which inhibits further operation of the valve and machine in the event of a failure within the valve mechanism.

2. Safety exhaust (dump) valves without a self-contained monitoring device should be used only in conjunction with a control system which assures monitoring of the valve. All safety exhaust valve installations should incorporate a monitoring system which inhibits further operation of the valve and machine in the event of a failure within the valve mechanism.

3. Per specifications and regulations, the ROSS L-O-X® and L-O-X® with EEZ-ON®, N06 and N16 Series operation products are defined as energy isolation devices, NOT AS EMERGENCY STOP DEVICES.

WARNINGS: Failure to follow these instructions can result in personal injury and/or property damage.

STANDARD WARRANTY

All products sold by the ROSS Group are warranted for a one-year period [with the exception of Filters, Regulators and Lubricators ("FRLs") which are warranted for a period of seven (7) years] from the date of purchase. All products are, during their respective warranty periods, warranted to be free of defects in material and workmanship. The ROSS Group's obligation under this warranty is limited to repair, replacement or refund of the purchase price paid for products which the ROSS Group has determined, in its sole discretion, are defective. All warranties become void if a product has been subject to misuse, misapplication, improper maintenance, modification or tampering. Products for which warranty protection is sought must be returned to the ROSS Group freight prepaid.

THE WARRANTY EXPRESSED ABOVE IS IN LIEU OF AND EXCLUSIVE OF ALL OTHER WARRANTIES AND THE ROSS GROUP EXPRESSLY DISCLAIMS ALL OTHER WARRANTIES EITHER EXPRESSED OR IMPLIED WITH RESPECT TO MERCHANTABILITY OR FITNESS FOR A PARTICULAR PURPOSE. THE ROSS GROUP MAKES NO WARRANTY WITH RESPECT TO ITS PRODUCTS MEETING THE PROVISIONS OF ANY GOVERNMENTAL OCCUPATIONAL SAFETY AND/OR HEALTH LAWS OR REGULATIONS. IN NO EVENT IS THE ROSS GROUP LIABLE TO PURCHASER, USER, THEIR EMPLOYEES OR OTHERS FOR INCIDENTAL OR CONSEQUENTIAL DAMAGES WHICH MAY RESULT FROM A BREACH OF THE WARRANTY DESCRIBED ABOVE OR THE USE OR MISUSE OF THE PRODUCTS. NO STATEMENT OF ANY REPRESENTATIVE OR EMPLOYEE OF THE ROSS GROUP MAY EXTEND THE LIABILITY OF THE ROSS GROUP AS SET FORTH HEREIN.

Americas

U.S.A.

ROSS CONTROLS
+1-248-764-1800
sales@rosscontrols.com
rosscontrols.com

Customer Service
1-800-GET-ROSS (438-1800)

Technical Service
1-888-TEK-ROSS (835-7677)

Canada

ROSS CANADA
+1-416-251-7677
sales@rosscanada.com
rosscanada.com
6077170 CANADA INC.
An Independent Representative

Brazil

ROSS SOUTH AMERICA Ltda.
+55-11-4335-2200
vendas@rosscontrols.com
rosscontrols.com.br

Europe

Germany

ROSS EUROPA GmbH
+49-6103-7597-100
sales@rosseuropa.com
rosseuropa.com

United Kingdom

ROSS UK Ltd.
+44-1543-671495
sales.uk@rosscontrols.com
rossuk.co.uk

France

ROSS FRANCE SAS
+33-1-49-45-65-65
sales@rossfrance.com
rossfrance.com

Asia & Pacific

Japan

ROSS ASIA K.K.
+81-42-778-7251
custsvc.ra@rosscontrols.com
rossasia.co.jp

India

ROSS CONTROLS INDIA Pvt. Ltd.
+91-44-2624-9040
sales.ri@rosscontrols.com
rosscontrols.com

China

ROSS CONTROLS (CHINA) Ltd.
+86-21-6915-7961
sales.cn@rosscontrols.com
rosscontrolschina.com

Full-Service Global Locations

There are ROSS Distributors Throughout the World

To meet your requirements across the globe, ROSS distributors are located throughout the world. Through ROSS or its distributors, guidance is available for the selection of ROSS products, both for those using pneumatic components for the first time and those designing complex systems.

Other literature is available for engineering, maintenance, and service requirements.

If you need products or specifications not shown in this catalog, please visit ROSS' website, contact ROSS or your ROSS distributor. The ROSS Support Team will be happy to assist you in selecting the best product for your application.

For a current list of countries and local distributors, visit ROSS' at rosscontrols.com.

©, **ROSS** CONTROLS®. All Rights Reserved.