MODEL
CODA

Pilot-to-close check valve
SERIES 1 / CAPACITY: 20 gpm / CAVITY: T-11A

sunhydraulics.com/model/CODA

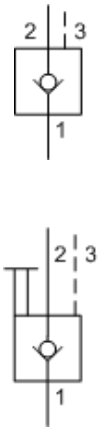

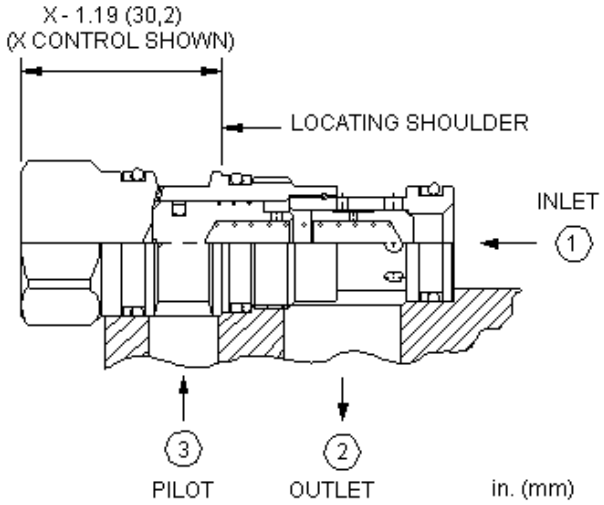

This valve is a spring biased closed, pilot-to-close check cartridge that has a 1.8:1 pilot ratio. The valve allows flow from port 1 to port 2 and blocks reverse flow. Pressure at the pilot port opposes pressure at port 1 at a ratio of 1.8:1. This valve is most often used in regeneration circuits.

TECHNICAL DATA

NOTE: DATA MAY VARY BY CONFIGURATION. SEE CONFIGURATION SECTION.

Cavity	T-11A
Series	1
Capacity	20 gpm
Maximum Operating Pressure	5000 psi
Pilot Ratio	1.8:1
Maximum Valve Leakage at 110 SUS (24 cSt)	1 drops/min.
Valve Hex Size	7/8 in.
Valve Installation Torque	30 - 35 lbf ft
Seal kit - Cartridge	Buna: 990011007
Seal kit - Cartridge	EPDM: 990011014
Seal kit - Cartridge	Polyurethane: 990011002
Seal kit - Cartridge	Viton: 990011006
Model Weight	0.28 lb.

CONFIGURATION OPTIONS

Model Code Example: CODAXCN

CONTROL (X)	CRACKING PRESSURE (C)	SEAL MATERIAL (N)	MATERIAL/COATING
X Standard Pilot	**C** 30 psi (2 bar)	**N** Buna-N	Standard Material/Coating
	A 4 psi (0,3 bar)	**E** EPDM	**/AP** Stainless Steel, Passivated
	B 15 psi (1 bar)	**V** Viton	**/LH** Mild Steel, Zinc-Nickel
	D 50 psi (3,5 bar)		
	E 75 psi (5 bar)		
	F 100 psi (7 bar)		
	G 150 psi (10,5 bar)		

© 2024 Sun Hydraulics

TECHNICAL FEATURES

- Minimum clearances between the spool and sleeve and a seal on the pilot piston diameter significantly reduce the potential for silting.
- Nominal pilot ratio is 1.8:1. This means that a pressure of 1000 psi (70 bar) at the pilot port will close a valve against a pressure of 1800 psi (125 bar) at port 1. Any decay or loss of pilot pressure could allow the valve to open, even if it is a momentary decay or loss.
- Pressure at the port 2 area directly opposes pilot pressure.
- Reverse flow through the valve from port 2 to port 1 is not possible under any condition.
- With equal pressures at all ports the valve is closed.
- In the begining the CO*A's did not have a positive seal on the pilot pistons and the CO*B's did. Now the CO*A's are positively sealed and the 2 valves are mechanically identical. CO*A's are more readily available and cost less.
- Cartridges configured with EPDM seals are for use in systems with phosphate ester fluids. Exposure to petroleum based fluids, greases and lubricants will damage the seals.
- Corrosion resistant cartridge valves are intended for use in corrosive environments and are identified by the model code suffix /AP or /LH (see CONFIGURATION section). For further details, please see the Materials of Construction page under TECHNICAL RESOURCES.
- Incorporates the Sun floating style construction to minimize the possibility of internal parts binding due to excessive installation torque and/or cavity/cartridge machining variations.

PERFORMANCE CURVES

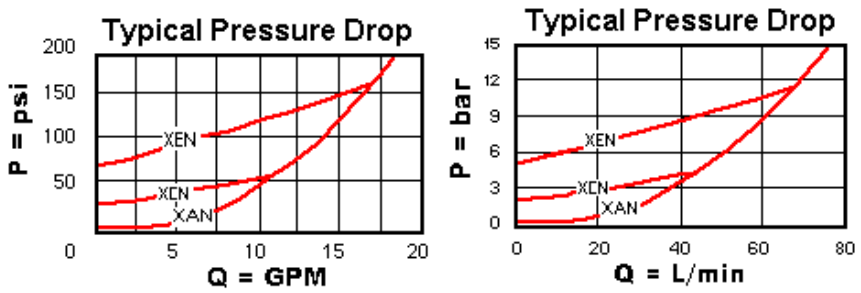

© 2024 Sun Hydraulics