

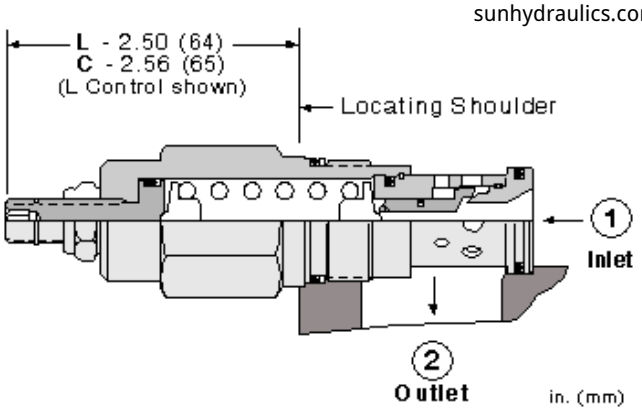

Direct-acting relief cartridges are normally closed, pressure-limiting valves used to protect hydraulic components from pressure transients. When the pressure at the inlet (port 1) reaches the valve setting, the valve starts to open to tank (port 2), throttling flow to limit the pressure rise. These valves are smooth and quiet, essentially zero leak, dirt tolerant, immune to silting and are very fast.

TECHNICAL DATA

NOTE: DATA MAY VARY BY CONFIGURATION. SEE CONFIGURATION SECTION.

Cavity	T-3A
Series	2
Capacity	50 gpm
Maximum Operating Pressure	5000 psi
Factory Pressure Settings Established at	4 gpm
Maximum Valve Leakage at Reseat	10 drops/min.
Response Time - Typical	2 ms
Reseat	>90% of setting
Adjustment - No. of CW Turns from Min. to Max. setting	6
Valve Hex Size	1 1/8 in.
Valve Installation Torque	45 - 50 lbf ft
Adjustment Screw Internal Hex Size	5/32 in.
Locknut Hex Size	9/16 in.
Locknut Torque	80 - 90 lbf in.
Seal kit - Cartridge	Buna: 990303007
Seal kit - Cartridge	EPDM: 990303014
Seal kit - Cartridge	Polyurethane: 990303002
Seal kit - Cartridge	Viton: 990303006
Model Weight	0.66 lb.

© 2024 Sun Hydraulics

CONFIGURATION OPTIONS

Model Code Example: RDFALAN

CONTROL (L)	ADJUSTMENT RANGE (A)	SEAL MATERIAL (N)	MATERIAL/COATING
L Standard Screw Adjustment	**A** 500 - 3000 psi (35 - 210 bar), 1000 psi (70 bar) Standard Setting	**N** Buna-N	Standard Material/Coating
C Tamper Resistant - Factory Set	**W** 800 - 4500 psi (55 - 315 bar), 1000 psi (70 bar) Standard Setting	**E** EPDM	**/AP** Stainless Steel, Passivated
Q Capped and Lockwired	**B** 300 - 1500 psi (20 - 105 bar), 1000 psi (70 bar) Standard Setting	**V** Viton	**/LH** Mild Steel, Zinc-Nickel
	C 1000 - 6000 psi (70 - 420 bar), 1000 psi (70 bar) Standard Setting		
	D 200 - 800 psi (14 - 55 bar), 400 psi (28 bar) Standard Setting		
	E 100 - 400 psi (7 - 28 bar), 200 psi (14 bar) Standard Setting		
	S 50 - 200 psi (3,5 - 14 bar), 100 psi (7 bar) Standard Setting		

TECHNICAL FEATURES

- Will accept maximum pressure at port 2; suitable for use in cross port relief circuits.
- The seals on the adjust screw are exposed to system pressure which means this valve can only be adjusted when the pressure is removed. The setting procedure is; check the setting, remove the pressure, adjust the valve, check the new setting.
- Valve is relatively insensitive to varying oil temperatures and oil borne contamination.
- Select a spring range where the desired relief setting is approximately mid-range to high between the minimum and maximum pressure to ensure maximum valve repeatability.
- Suitable for use in load holding applications.
- Back pressure on the tank port (port 2) is directly additive to the valve setting at a 1:1 ratio.
- Cartridges configured with EPDM seals are for use in systems with phosphate ester fluids. Exposure to petroleum based fluids, greases and lubricants will damage the seals.
- Test pressure for each range is as follows: A range - 2000 psi (138 bar), B range - 1000 psi (69 bar), C range - 4000 psi (276 bar), D range - 800 psi (55 bar), E range - 400 psi (28 bar), S range - 150 psi (10 bar), W range - 3000 psi (207 bar).
- Reseat meets or exceeds 90% of crack pressure at test setting. Settings lower than the test pressure may result in lower reseat percentages.
- All 2-port relief cartridges (except pilot reliefs) are physically and functionally interchangeable (same flow path, same cavity for a given frame size).
- Incorporates the Sun floating style construction to minimize the possibility of internal parts binding due to excessive installation torque and/or cavity/cartridge machining variations.

PERFORMANCE CURVES

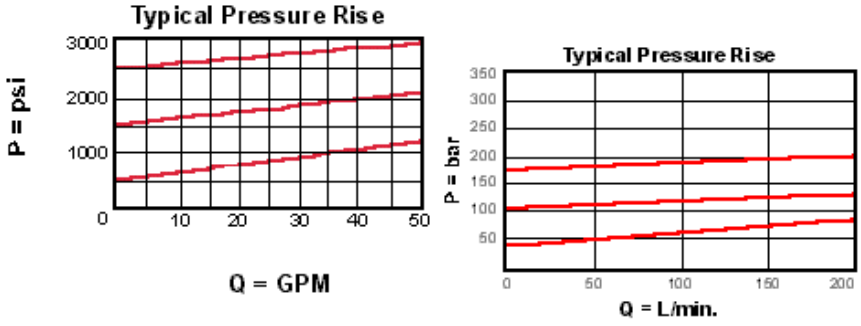

RELATED MODELS

- RDFA3 Non-adjustable direct-acting relief valve

© 2024 Sun Hydraulics