

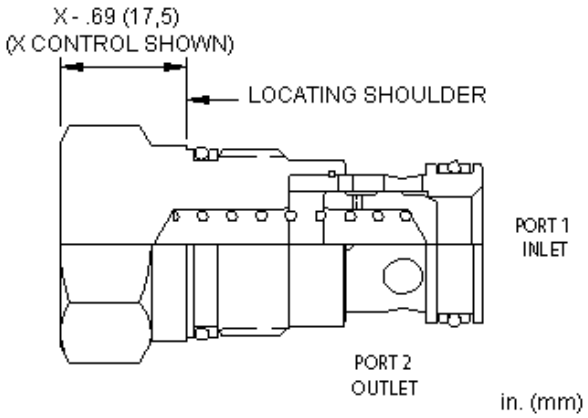

Free-flow, nose-to-side check valves are on/off circuit components that allow free flow from the inlet (port 1) to the outlet (port 2) and block flow in the opposite direction.

TECHNICAL DATA

NOTE: DATA MAY VARY BY CONFIGURATION. SEE CONFIGURATION SECTION.

Cavity	T-5A
Series	2
Capacity	40 gpm
Maximum Operating Pressure	5000 psi
Maximum Valve Leakage at 110 SUS (24 cSt)	1 drops/min.
Valve Hex Size	1 1/8 in.
Valve Installation Torque	45 - 50 lbf ft
Seal kit - Cartridge	Buna: 990203007
Seal kit - Cartridge	EPDM: 990203014
Seal kit - Cartridge	Viton: 990203006
Model Weight	0.41 lb.

CONFIGURATION OPTIONS

Model Code Example: CXFAXCN

CONTROL (X)	CRACKING PRESSURE (C)	SEAL MATERIAL (N)	MATERIAL/COATING
X Not Adjustable	**C** 30 psi (2 bar)	**N** Buna-N	Standard Material/Coating
	A 4 psi (0,3 bar)	**E** EPDM	**/AP** Stainless Steel, Passivated
	B 15 psi (1 bar)	**V** Viton	**/LH** Mild Steel, Zinc-Nickel
	D 50 psi (3,5 bar)		
	E 75 psi (5 bar)		
	F 100 psi (7 bar)		

TECHNICAL FEATURES

- Two-port check valves share the same cavity for a given frame size, however, pay close attention as flow paths may be in opposite directions.
- Check valves offer extremely low leakage rates with a maximum leakage of less than 1 drop per minute (0,07 cc/min).
- Will accept 5000 psi (350 bar) at ports 1 and 2.
- Cartridges configured with EPDM seals are for use in systems with phosphate ester fluids. Exposure to petroleum based fluids, greases and lubricants will damage the seals.
- Corrosion resistant cartridge valves are intended for use in corrosive environments and are identified by the model code suffix /AP or /LH (see CONFIGURATION section). For further details, please see the Materials of Construction page.
- Incorporates the Sun floating style construction to minimize the possibility of internal parts binding due to excessive installation torque and/or cavity/cartridge machining variations.

© 2025 Sun Hydraulics

PERFORMANCE CURVES

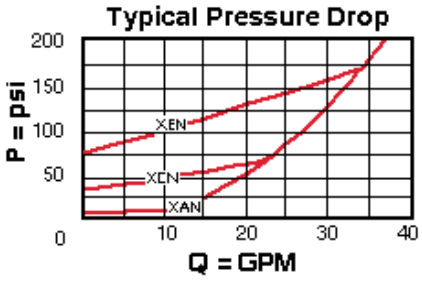

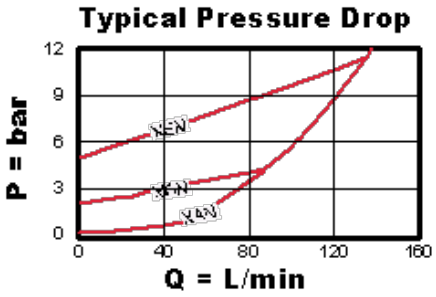

© 2025 Sun Hydraulics