MODEL
LODC

Pilot-to-close, spring-biased closed, unbalanced poppet logic element
SERIES 1 / CAPACITY: 25 gpm / CAVITY: T-11A

sunhydraulics.com/model/LODC

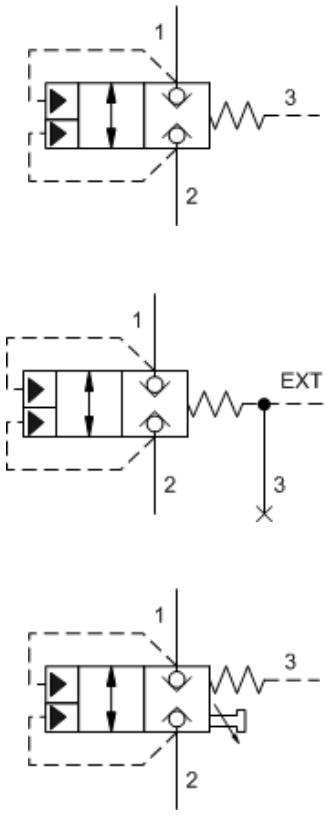

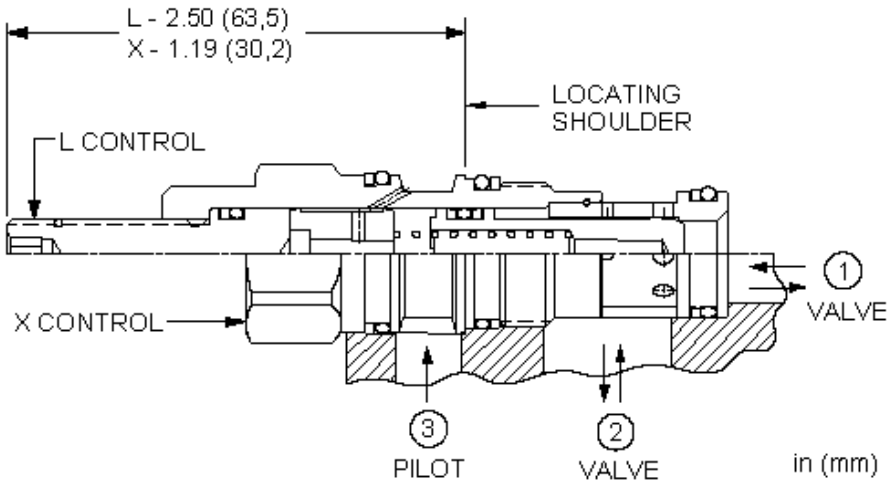

These unbalanced, pilot-to-close logic valves are 2-way switching elements that are spring biased closed. Pressure at either work port 1 or 2 will oppose the spring and tend to open the valve while pressure at port 3 will tend to close it. The force generated at port 3, plus the spring force, must be greater than the sum of the forces acting at port 1 and port 2 for the valve to remain closed. NOTE: The pilot area (port 3) is 1.8 times the area at port 1 and 2.25 times the area at port 2.

TECHNICAL DATA

NOTE: DATA MAY VARY BY CONFIGURATION. SEE CONFIGURATION SECTION.

Cavity	T-11A
Series	1
Capacity	25 gpm
Maximum Operating Pressure	5000 psi
Maximum Valve Leakage at 110 SUS (24 cSt)	10 drops/min.
Pilot Volume Displacement	.04 in³
Pilot Passage into Valve	.031 in.
Area Ratio, A3 to A1	1.8:1
Area Ratio, A3 to A2	2.25:1
Valve Hex Size	7/8 in.
Valve Installation Torque	30 - 35 lbf ft
Seal kit - Cartridge	Buna: 990011007
Seal kit - Cartridge	Polyurethane: 990011002
Seal kit - Cartridge	Viton: 990011006
Model Weight	0.27 lb.

CONFIGURATION OPTIONS

Model Code Example: LODCXDN

CONTROL (X)	CRACKING PRESSURE (D)	SEAL MATERIAL (N)	MATERIAL/COATING
X Not Adjustable	**D** 50 psi (3,5 bar)	**N** Buna-N	Standard Material/Coating
		V Viton	**/AP** Stainless Steel, Passivated
			/LH Mild Steel, Zinc-Nickel

© 2025 Sun Hydraulics

TECHNICAL FEATURES

- These valves have positive seals between port 2 and the pilot area.
- Because these valves are unbalanced, operation is pressure dependent. Opening and closing of the poppet are functions of the force balances on three areas: Port 1 = 100%, Port 2 = 80%, and the Pilot Area = 180%.
- These valves are pressure responsive at all ports, therefore it is essential to consider all aspects of system operation through a complete cycle. Pressure changes at any one port may cause a valve to switch from a closed to an open position, or vice versa. All possible pressure changes in the complete circuit must be considered to assure a safe, functional system design.
- Pilot port 3 requires a controlled pressure. A blocked port 3 may result in pressure intensification due to the floating design of the sleeve.
- All ports will accept 5000 psi (350 bar).
- Corrosion resistant cartridge valves are intended for use in corrosive environments and are identified by the model code suffix /AP for external stainless steel components, or /LH for external zinc-nickel plated components. See the CONFIGURATION section for all options. For further details, please see the Materials of Construction page located under TECH RESOURCES.
- Incorporates the Sun floating style construction to minimize the possibility of internal parts binding due to excessive installation torque and/or cavity/cartridge machining variations.

PERFORMANCE CURVES

