

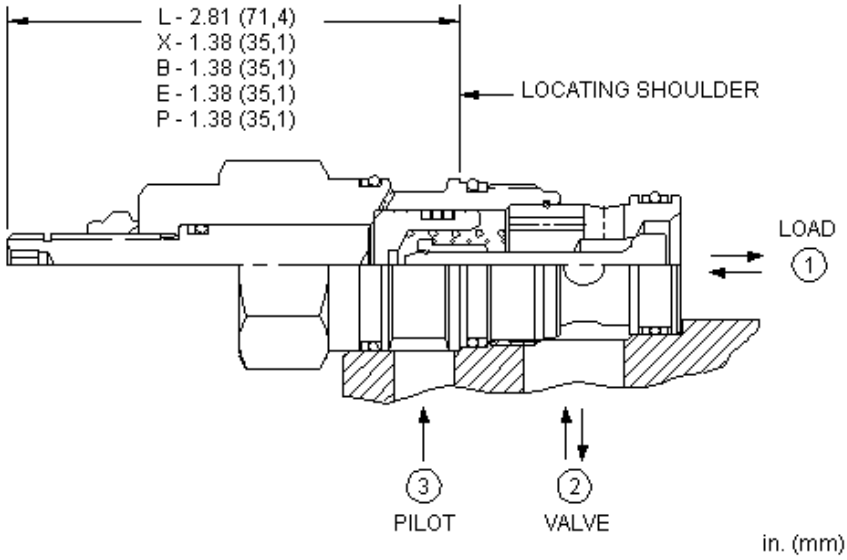

in. (mm)

This valve is a pilot to open check valve. It has a non-sealed pilot, a steel seat, and is non-vented. It allows free flow from the valve (port 2) to the load (port 1) and blocks flow in the opposite direction. Pressure at the pilot (port 3) will open the valve from port 1 to port 2. Pilot pressure needed at port 3 to open the valve is directly proportional to the load pressure at port 1. Pressure at port 2 directly opposes pilot pressure.

TECHNICAL DATA

NOTE: DATA MAY VARY BY CONFIGURATION. SEE CONFIGURATION SECTION.

Cavity	T-2A
Series	2
Capacity	30 gpm
Maximum Operating Pressure	5000 psi
Pilot Ratio	3:1
Maximum Valve Leakage at 110 SUS (24 cSt)	1 drops/min.
Valve Hex Size	1 1/8 in.
Valve Installation Torque	45 - 50 lbf ft
Seal kit - Cartridge	Buna: 990202007
Seal kit - Cartridge	EPDM: 990202014
Seal kit - Cartridge	Polyurethane: 990002002
Seal kit - Cartridge	Viton: 990202006
Model Weight	0.53 lb.

CONFIGURATION OPTIONS

Model Code Example: CKEBXCN

CONTROL (X)	CRACKING PRESSURE (C)	SEAL MATERIAL (N)	MATERIAL/COATING
X Standard Pilot	**C** 30 psi (2 bar)	**N** Buna-N	Standard Material/Coating
L Manual Load Release	**A** 4 psi (0,3 bar)	**E** EPDM	**/AP** Stainless Steel, Passivated
	B 15 psi (1 bar)	**V** Viton	**/LH** Mild Steel, Zinc-Nickel
	D 50 psi (3,5 bar)		
	E 75 psi (5 bar)		
	F 100 psi (7 bar)		

© 2025 Sun Hydraulics

TECHNICAL FEATURES

- This 3 port pilot-to-open check valve and 3 port counterbalance valves are physically interchangeable (i.e. same cavities, same flow path for a given frame size). However, cartridge extension dimensions from the mounting surface may vary.
- Provides hose break protection, prevents loads from drifting and positively locks pressurized loads.
- Standard unsealed pilot allows air trapped in the pilot line to be purged from the circuit.
- Extremely low leakage. The seat and poppet are heat treated for long life. If the load drifts due to the valve, the seat has probably been damaged by contamination and the valve should be replaced.
- Optional external porting out of the hex end of the cartridge is available for external piloting. In this configuration, port 3 is blocked. See Control options E, and P.
- Pilot-to-open check cartridges are locking valves, not motion control valves. For motion control applications, use counterbalance valves.
- For models with manual load release control option, turn load release clockwise to release load.
- Cartridges configured with EPDM seals are for use in systems with phosphate ester fluids. Exposure to petroleum based fluids, greases and lubricants will damage the seals.
- Corrosion resistant cartridge valves are intended for use in corrosive environments and are identified by the model code suffix /AP for external stainless steel components, or /LH for external zinc-nickel plated components. See the CONFIGURATION section for all options. For further details, please see the Materials of Construction page located under TECH RESOURCES.
- Incorporates the Sun floating style construction to minimize the possibility of internal parts binding due to excessive installation torque and/or cavity/cartridge machining variations.

PERFORMANCE CURVES

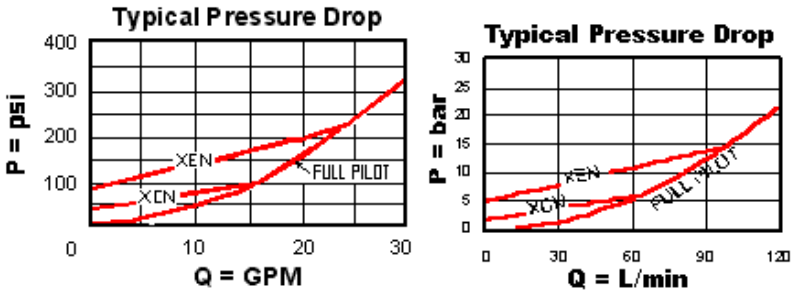

RELATED MODELS

- CKEBS Vented pilot-to-open check valve with SAE-4 external pilot port and standard pilot
- CKEBV Vented pilot-to-open check valve with 1/4 NPTF external pilot port and standard pilot

© 2025 Sun Hydraulics