Analogue amplifier card for 4/3 proportional directional valves of type 4WRE

RE 30119/07.05 1/10
Replaces: 06.03

Type VT-VRPA2-.-1X/...

Series 1X

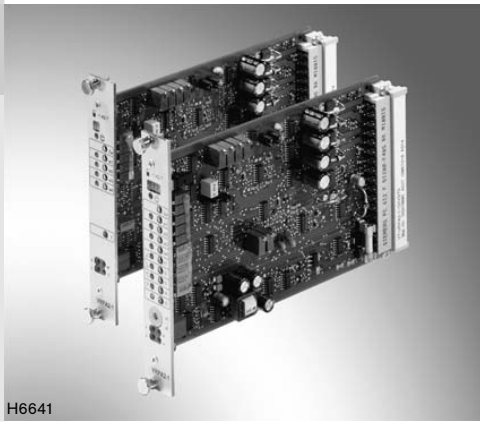
H6641

Table of contents

Contents	Page
Features	1
Ordering code	2
Function	3
Block circuit diagram / pin assignment	4 and 5
Technical data	6 and 7
Indicator / adjustment elements	8 and 9
Unit dimensions	10
Engineering / maintenance notes / supplementary information	10

Features

- Suitable for controlling direct operated 4/3 proportional directional valves with electrical position feedback, type 4WRE, sizes 6 und 10, component series 2X
- Designed as printed circuit board in Euro-format 100 x 160 mm and suitable for installation in a rack
- Command value inputs:
  - Differential input ±10 V
  - Four callable command value inputs ±10 V
  - Current input 4 to 20 mA
- Inversion of the internal command value signal via 24V input or by means of jumpers
- Selection of ramp time through quadrant recognition (24V input) or ramp time call-ups (24V inputs) (option T5)
- Changeover of the ramp time range by means of jumpers
- Characteristic curve correction by means of separately adjustable jump heights and maximum values
- Enable input
- Output signal “ready for operation“
- Measuring sockets that can be switched over (option T5)
- Reverse polarity protection for voltage supply
- Power supply unit with DC/DC converter without raised zero point

Ordering code

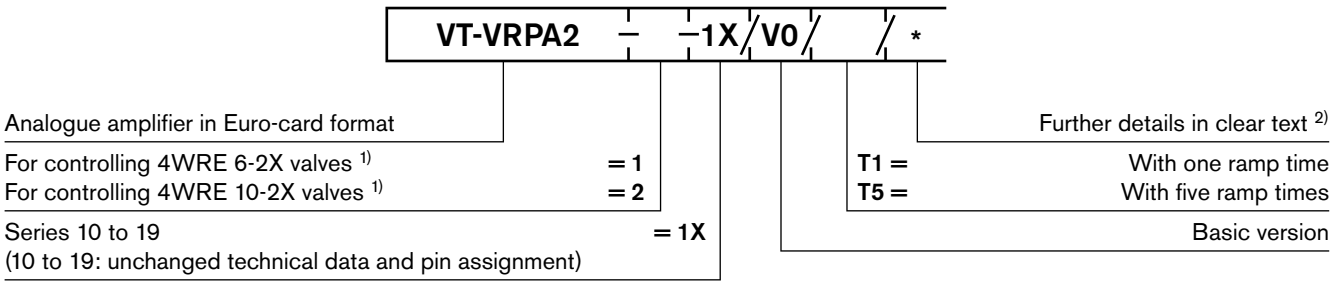

1) Note:
Suitable only for 4/**3** proportional directional valves

2) Additional functions – e.g. output stage monitoring, actual value monitoring or ramp-ready signal on enquiry

Suitable card holders:

- 19“ rack types VT 19101, VT 19102, VT 19103 and VT 19110 (see RE 29768)
- Enclosed card holder type VT 12302 (see RE 30103) with use of a blind plate 4TE/3HE (material no. R900021004)
- Open card holder type VT 3002-2X/48 (see RE 29928) Only for installation in control cabinet!

Suitable power supply unit:

- Type VT-NE30-2X, see RE 29929 Compact power supply unit 115/230 VAC → 24 VDC, 108 W

Test equipment:

- Type VT-PPV-1X see RE 29687

Function

Power supply unit [1]

The amplifier card is provided with a power supply unit with making-current limiter. It supplies all the internally required positive and negative voltages. The making-current limiter prevents high making-current peaks caused by smoothing capacitors in the current output stage.

Command value preselection

The internal command value signal is generated from the sum (summation [6]) of the external command value signal applied to differential input [2] and current input [3], called signal [4] and zero point offset [5] (zero point potentiometer "Zw").

The following is valid:

Normalized value	Current input	Differential input	Comm. value meas. socket	Direction of flow
–100 %	4 mA	–10 V	–10 V	P to B, A to T
0 %	12 mA	0 V	0 V	
100 %	20 mA	10 V	10 V	P to A, B to T
0 %	< 1 mA **		0 V	

**If the current input is not activated or in the case of a cable break of the command value cable, the resulting internal command value signal is 0 %.

There is no changeover between current and voltage inputs. The inputs are permanently available (see terminal assignment).

Command value call-ups [4]

Four command value signals, "w1" to "w4", can be called up. External command value voltages (command values 1 to 4) are fed forward either directly through regulated voltage outputs +10 V and –10 V or via external potentiometers. If the command value inputs are connected directly to the regulated voltages, the command values can be adjusted using potentiometers "w1" to "w4". If external potentiometers are used, the internal potentiometers act as attenuators or limiters.

Only one call-up is possible at a time. If several call-ups are activated simultaneously, call-up "1" has lowest priority, call-up "4" highest priority.

The active call-up is signalled by a yellow LED on the front panel.

Command value inversion [7]

The command value that was generated internally from input signals, command value call-ups and the -zero point offset signal can be inverted with the help of an external signal or jumper J1. The application of an external inversion signal is signalled by an LED ("–1") on the front panel.

Enable function [8]

The enable function enables the current output stages and passes the internal command value signal on to the ramp generator. The enable signal is indicated by an LED on the front panel. When the enable is cut in, the internal command value changes (with any preselected command value) according to the set ramp time. This ensures that a controlled valve does not open abruptly.

Ramp generator [9]

The ramp generator limits the gradient of the control variable. The downstream step functions and amplitude attenuators do not extend or shorten the ramp time.

Jumper J2 can be used to set the ramp time to minimum (< 2 ms) (ramp off).

External ramp time adjustment

The ramp time set internally can be extended using an external potentiometer. The setting can be checked with the help of the measuring socket. In the case of a cable break, the internal presetting will be used automatically.

Characteristic curve generator [11]

The adjustable characteristic curve generator can be used to adjust the step-change height and maximum values separately for positive and negative signals in accordance with the hydraulic requirements. The actual curve shape through the zero point is not step-like, but linear.

Amplitude limiter [12]

The internal command value is limited to approx. ±110 % of the nominal range.

Oscillator [14]

The oscillator generates the control signal for the inductive position transducer.

Demodulator [15]

The demodulator generates the actual value signal of the valve spool position from the position transducer signal.
100 % ≙ 10 V

Position controller [17]

The position controller is optimised to the individual valve.

Current output stage [18]

The current output stage generates the clocked solenoid current for the proportional valve. The solenoid current is limited to 2.5 A to 2.8 A per output. The current output stage outputs are short-circuit-proof. In the case of an internal fault signal or missing enable, the output stages are deactivated.

Fault detection [19]

The position transducer cable is monitored for cable break and short-circuit on the primary side, and the output stages for excessive current.

[ ] = Cross-reference to the block circuit diagram on page 4

Block circuit diagram / pin assignment: VT-VRPA2-.-1X/V0/T1

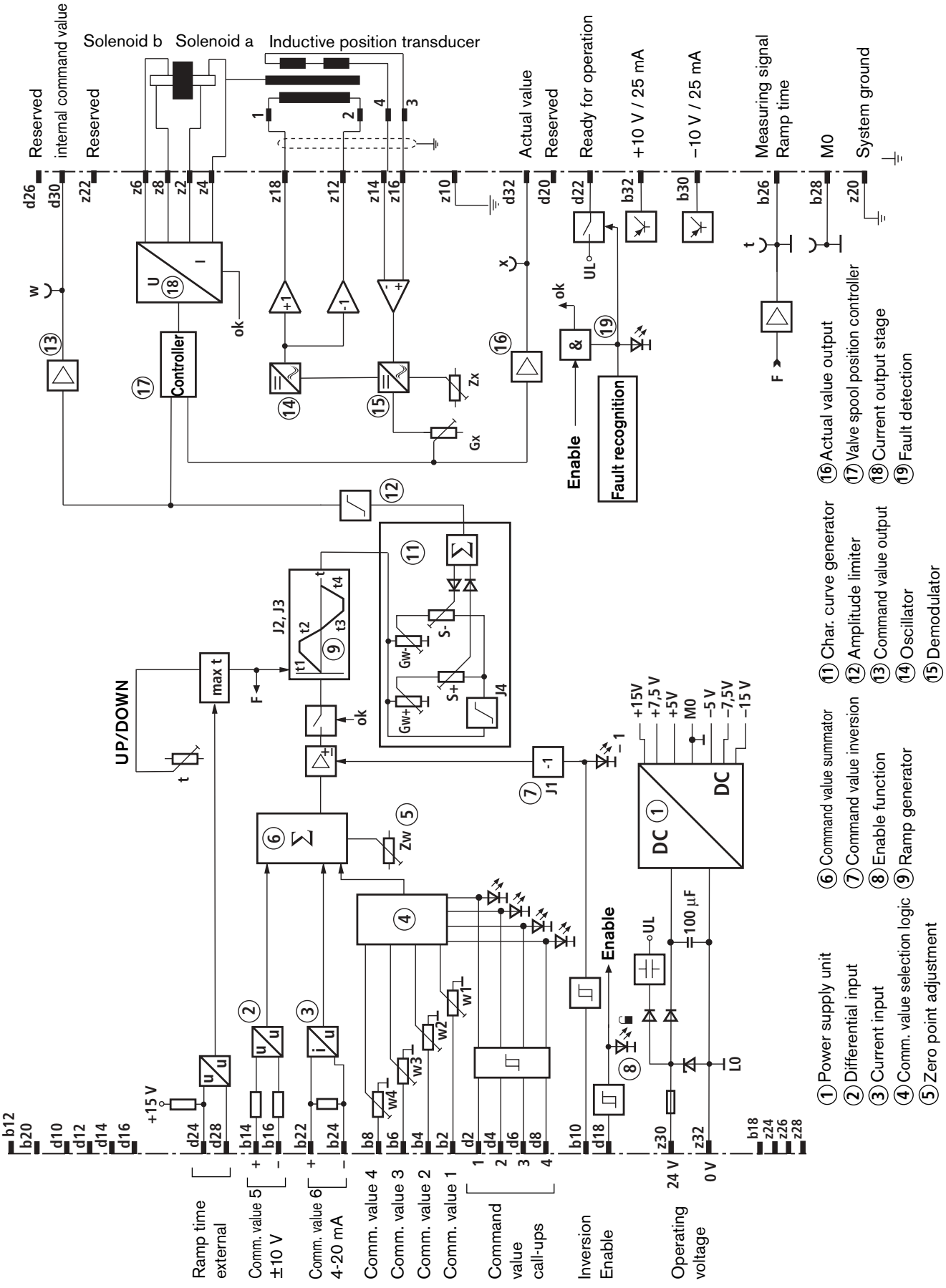

Block circuit diagram / pin assignment: VT-VRPA2-.-1X/V0/T5

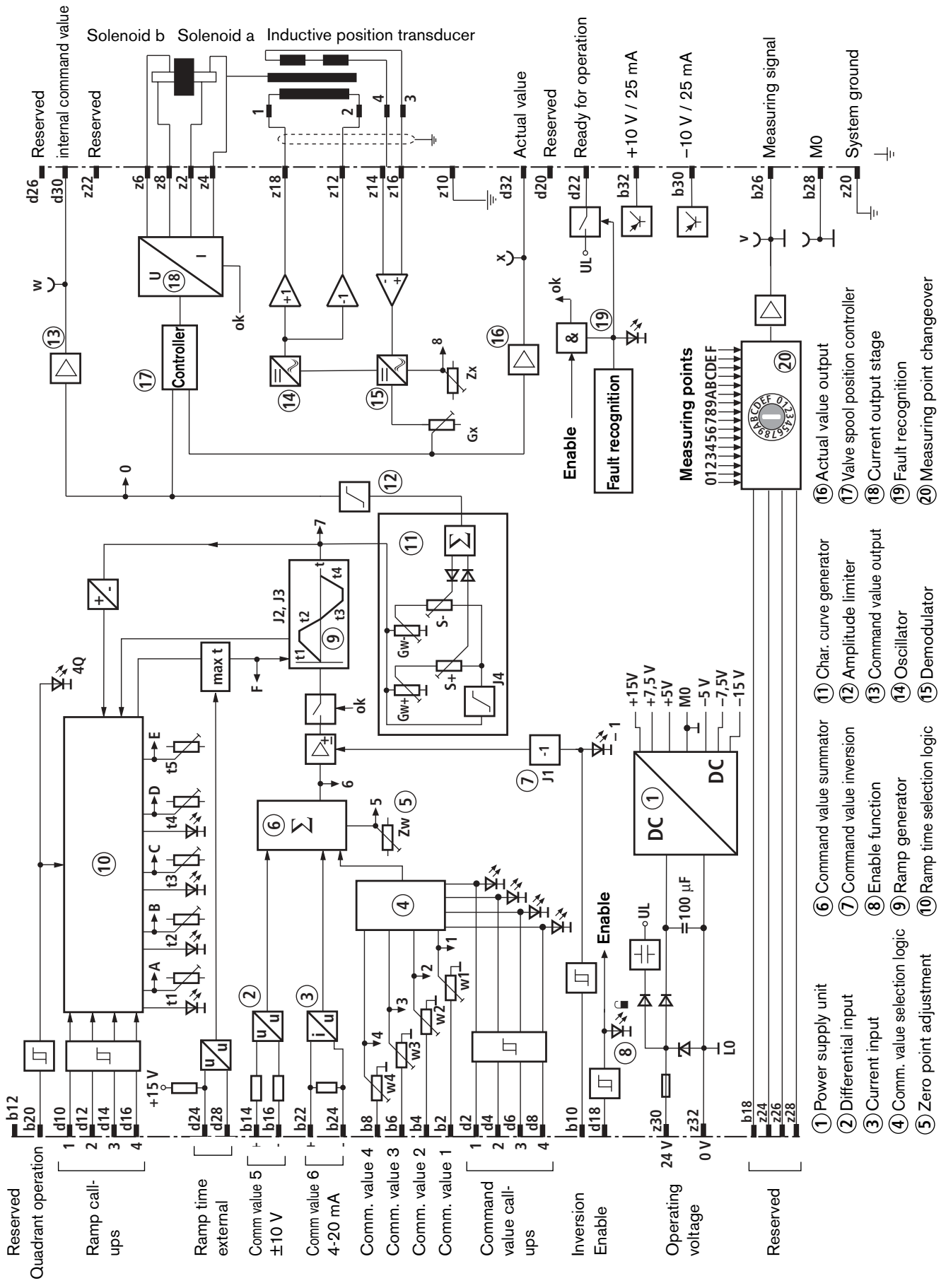

Technical data (for applications outside these parameters, please consult us!)

Operating voltage	U_O	24 VDC +40 % –20 %
Operating range:		
– Upper limit value	$u_O(t)_{max}$	35 V
– Lower limit value	$u_O(t)_{min}$	18 V
Power consumption	P_S	< 24 VA
Current consumption	I	< 2 A
Fuse	I_s	2 A medium time lag, can be replaced
Inputs:		
– Analogue		
• Command values 1 to 4 (potentiometer inputs)	U_i	0 to ±10 V; R_i > 100 kΩ (reference is M0)
• Command value 5 (differential input)	U_i	0 to ±10 V; R_i > 50 kΩ
• Command value 6 (current input)	I_i	4 to 20 mA; load R_i = 100 Ω
• Ramp time external	U_i	0 to +10 V; R_i = 10 kΩ (internally raised to +15 V; reference is M0)
– Digital		
• Command value call-ups	U	8.5 V to U_O → call-up activated; R_i > 100 kΩ
	U	0 to 6.5 V → no call-up; R_i > 100 kΩ
• Ramp call-ups	U	8.5 V to U_O → call-up activated; R_i > 100 kΩ
	U	0 to 6.5 V → no call-up; R_i > 100 kΩ
• Quadrant recognition	U	8.5 V to U_O → ON; R_i > 100 kΩ
	U	0 to 6.5 V → OFF; R_i > 100 kΩ
• Command value inversion	U	8.5 V to U_O → ON; R_i > 100 kΩ
	U	0 to 6.5 V → OFF; R_i > 100 kΩ
• Enable	U	8.5 V to U_O → ON; R_i > 100 kΩ
	U	0 to 6.5 V → OFF; R_i > 100 kΩ
Adjustment ranges:		
– Zero balancing (potentiometer “Zw“)		±30 %
– Command value (potentiometers “w1“ to “w4“)		0 to 110 %
– Ramp times (potentiometers “t1“ to “t5“)		20 ms to 5 s; can be changed over, 0.2 to 50 s
– Step-change height (potentiometers “S+“ and “S–“)		0 % to 50 %
– Amplitude attenuator (potentiometers “G+“ and “G–“)		0 % to 110 % (valid for setting of step-change height to 0 %)

Technical data (for applications outside these parameters, please consult us!)

Outputs:		
– Command value signal	U	±10 V ± 2 %; I_{max} = 2 mA
– Actual value signal	U	±10 V ± 2 %; I_{max} = 2 mA
– Measuring point signal (option 5)	U	±10 V ± 2 %; I_{max} = 2 mA
– Ready for operation	U	> 16 V; 50 mA (in case of fault: U < 1 V; R_i = 10 kΩ)
– Regulated voltages	U	±10 V ± 2 %; 25 mA; short-circuit-proof
– Current output stages	I	0 to 2.5 A; short-circuit-proof; clocked ca. 5 kHz
– Oscillator	U	±5 V_{SS} per output; 10 mA
	F	5.6 kHz ± 10 %
– Measuring sockets	U	±10 V ± 2 %; I_{max} = 2 mA
Type of connection		48-pin male connector, DIN 41612, form F
Card dimensions		Euro-card 100 x 160 mm, DIN 41494
Front panel dimensions:		
– Height		3 HE (128.4 mm)
– Width soldering side		1 TE (5.08 mm)
– Width component side		3 TE
Permissible operating temperature range	ϑ	0 to +50 °C
Storage temperature range	ϑ	–25 °C to +85 °C
Weight	m	0.17 kg (net)

Note:

For details regarding **environment simulation tests** in the field of EMC (electromagnetic compatibility), climate and mechanical stress, see RE 30119-U (declaration on environmental compatibility).

Indicator / adjustment elements

VT-VRPA2-.-1X/V0/T1

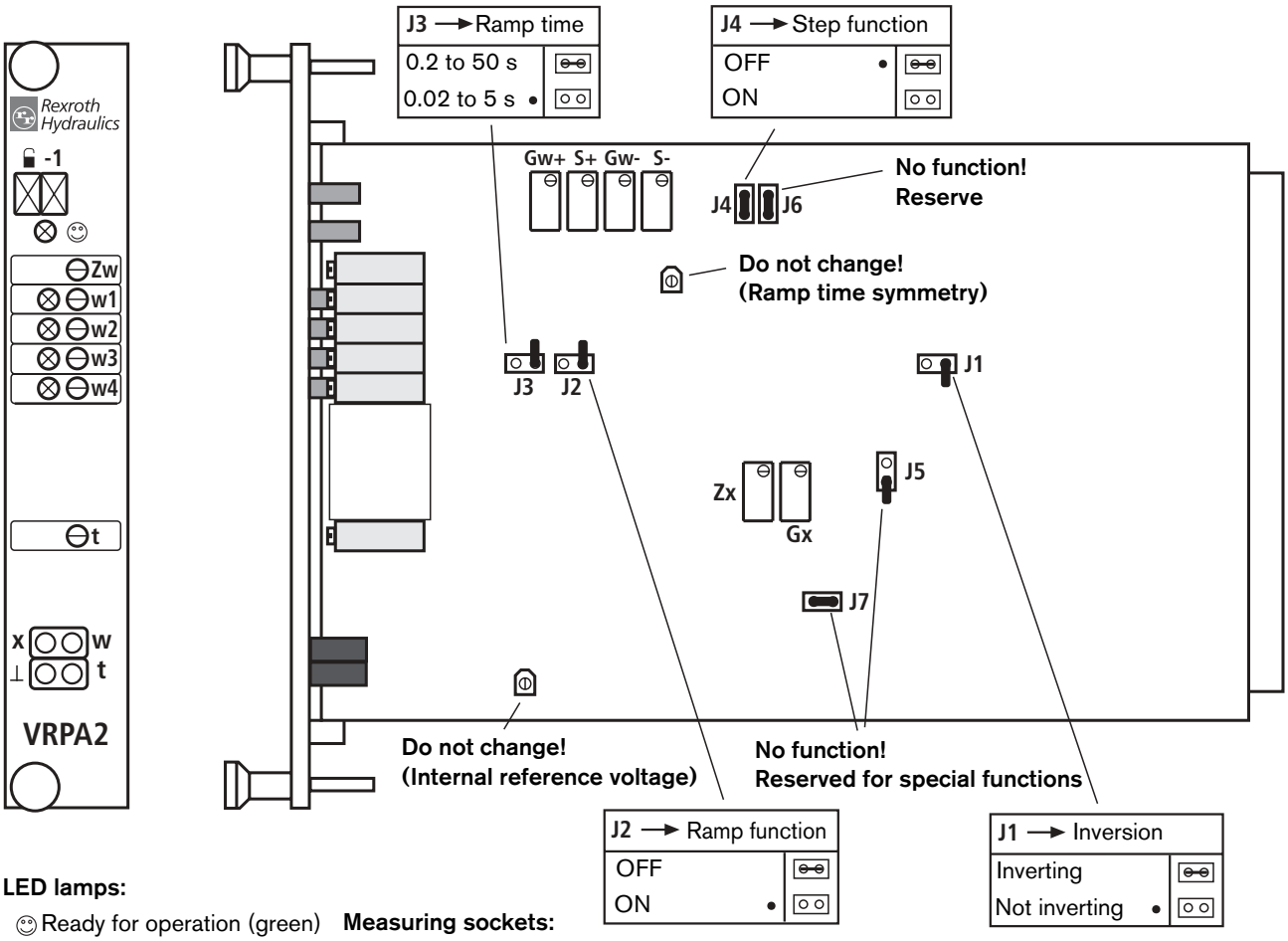

LED lamps:

- Ready for operation (green)
- Enable (yellow)
- **–1** External inversion

Measuring sockets:

- **x, w, t** Measuring signal
- ⊥ Measuring zero

- Jumper plugged
- Jumper open
- • Factory setting of jumpers

Potentiometers (some with LED lamps):

- **Zw** Zero point balancing
- **w1** Command value 1
- **w2** Command value 2
- **w3** Command value 3
- **w4** Command value 4
- **t** Ramp time

Can be adjusted on the printed-circuit board:

- **Gw+** Amplitude attenuator for positive command values
- **Gw–** Amplitude attenuator for negative command values
- **S+** Step-change height for positive direction
- **S–** Step-change height for negative direction

If you change sealed potentiometer settings, the warranty will become void!

Indicator / adjustment elements

VT-VRPA2-.-1X/V0/T5

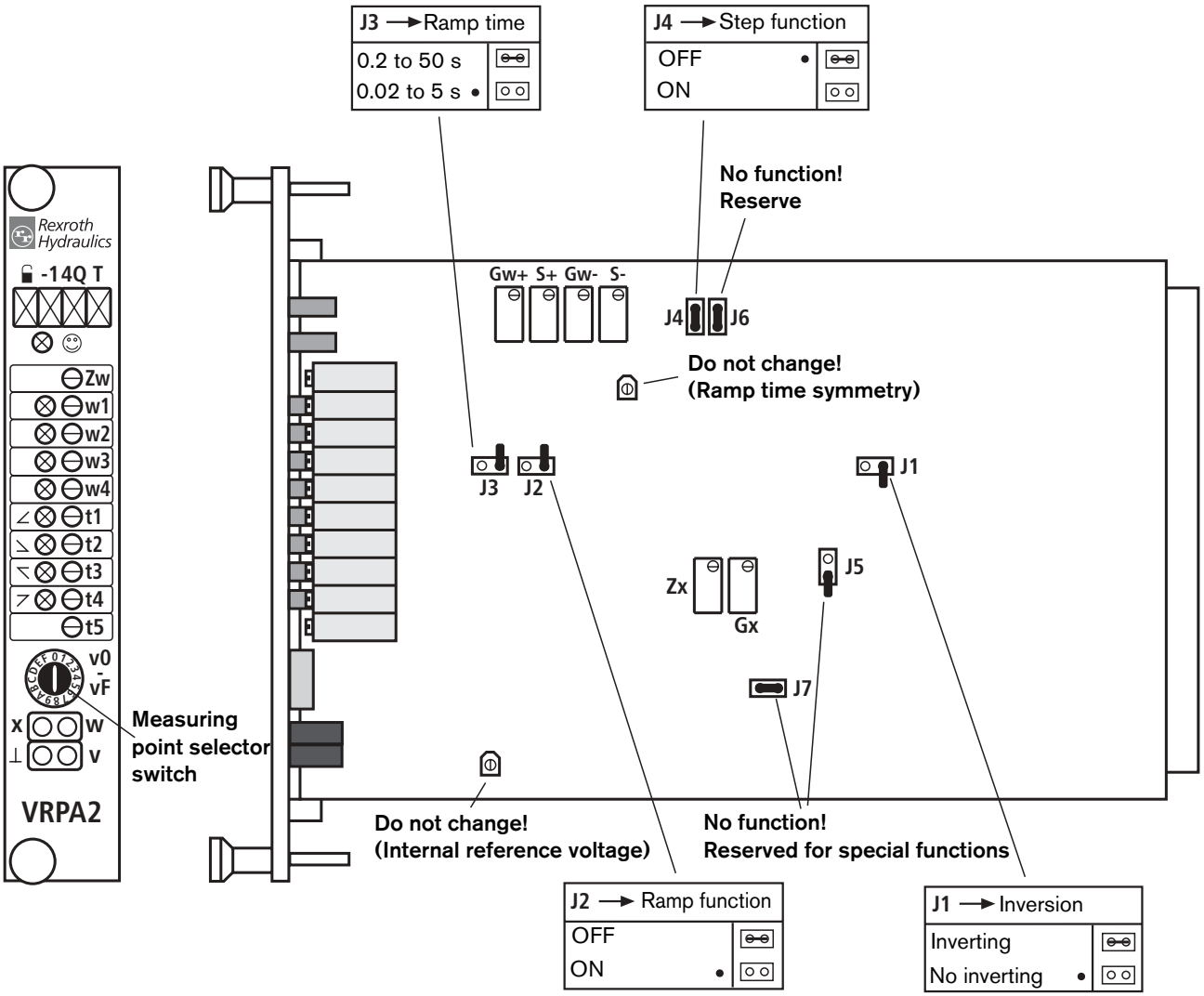

LED lamps:

- Ready for operation (green)
- Enable (yellow)
- **–1** External inversion
- **4Q** Quadrant recognition
- **T** Reserved

Measuring sockets:

- **x, w, v** Measuring signal
- ⊥ Measuring zero

- Jumper plugged
- Jumper open
- • Factory setting of jumpers

Potentiometers (some with LED lamps):

- **Zw** Zero point balancing
- **w1** Command value 1
- **w2** Command value 2
- **w3** Command value 3
- **w4** Command value 4
- **t1** Ramp time 1
- **t2** Ramp time 2
- **t3** Ramp time 3
- **t4** Ramp time 4
- **t5** Ramp time 5

Can be adjusted on the printed-circuit board:

- **Gw+** Amplitude attenuator for positive command values
- **Gw–** Amplitude attenuator for negative command values
- **S+** Step-change height for positive direction
- **S–** Step-change height for negative direction

If you change sealed potentiometer settings, the warranty will become void!

Unit dimensions (nominal dimensions in mm)

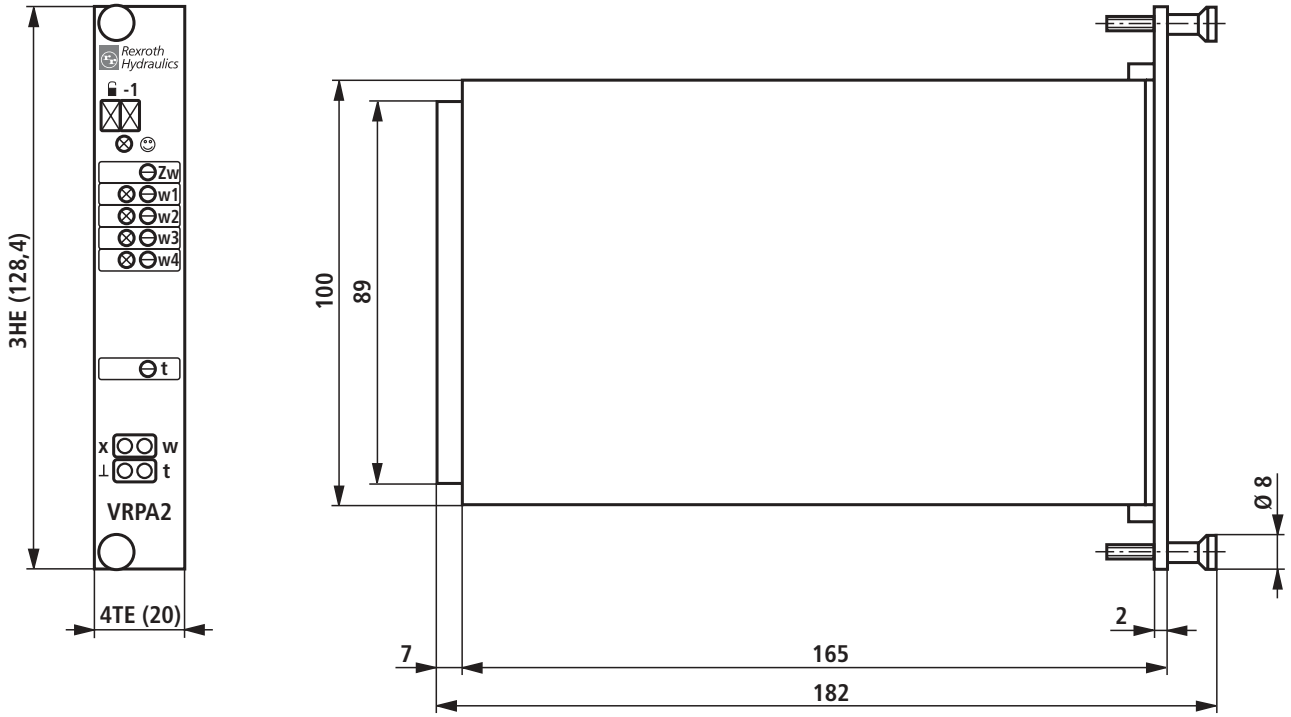

Engineering / maintenance notes / supplementary information

For further information, see “Product description and commissioning instructions VT-VRPA2-.-1X/…” (RE 30119-B).

Bosch Rexroth AG
Hydraulics
Zum Eisengießer 1
97816 Lohr am Main, Germany
Telefon +49 (0) 93 52 / 18-0
Telefax +49 (0) 93 52 / 18-23 58
documentation@boschrexroth.de
www.boschrexroth.de

© This document, as well as the data, specifications and other information set forth in it, are the exclusive property of Bosch Rexroth AG. It may not be reproduced or given to third parties without its consent.

The data specified above only serve to describe the product. No statements concerning a certain condition or suitability for a certain application can be derived from our information. The information given does not release the user from the obligation of own judgment and verification. It must be remembered that our products are subject to a natural process of wear and aging.

Notes

Notes

Bosch Rexroth AG
Hydraulics
Zum Eisengießer 1
97816 Lohr am Main, Germany
Telefon +49 (0) 93 52 / 18-0
Telefax +49 (0) 93 52 / 18-23 58
documentation@boschrexroth.de
www.boschrexroth.de

© This document, as well as the data, specifications and other information set forth in it, are the exclusive property of Bosch Rexroth AG. It may not be reproduced or given to third parties without its consent.

The data specified above only serve to describe the product. No statements concerning a certain condition or suitability for a certain application can be derived from our information. The information given does not release the user from the obligation of own judgment and verification. It must be remembered that our products are subject to a natural process of wear and aging.