RE 30 095/05.02

Replaces: 01.99

Electrical amplifiers Types VT 5005 to VT 5008

Series 1X

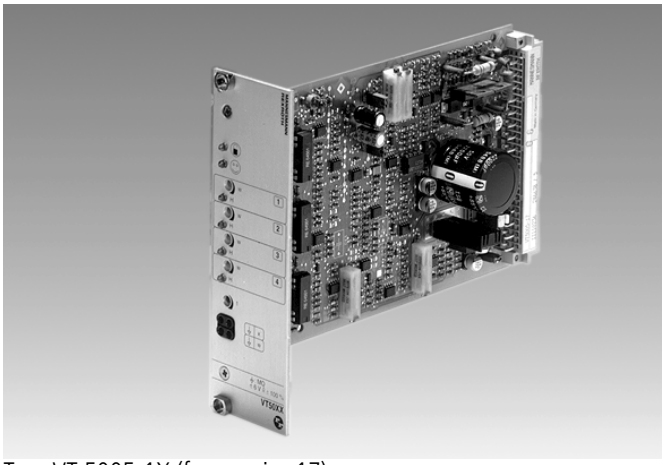

H/A/D 5581/96

Type VT 5005-1X (from series 17)

Table of contents

Contents	Page
Features	1
Ordering code	1
Functional description	2
Block circuit diagram / pin assignment VT 5005 and VT 5006	3
Block circuit diagram / pin assignment VT 5007 and VT 5008	4
Technical data	5
Indicator / adjustment elements	6
Unit dimensions	7
Engineering notes / maintenance instructions / supplementary information	7

Note:

The ramp time of the amplifiers is factory-set to 5 s (for setting a ramp time of 1 s, see page 6).

Card holder:

– Type VT 3002-2X/32, see RE 29 928
Single card holder without power supply unit

Features

– Suitable for controlling direct operated proportional directional valves with electrical position feedback (type 4WRE, series 1X)
– Differential input
– Enable input with LED lamp
– "Readiness for operation" is signalled by LED lamp
– Step function generator and ramp generator
– Five ramp times can be set with the help of potentiometers (VT 5007 and VT 5008 only)
– Four command values that can be adjusted by means of potentiometers, call-ups are signalled by LEDs
– Controller for valve spool position
– Two clocked current output stages
– Oscillator and demodulator for inductive position measurement with cable break detection
– Polarity reversal protection for voltage supply

Power supply unit:

– Type VT-NE30-1X, see RE 29 929
Compact power supply unit 115/230 VAC → 24 VDC, 70 VA

Ordering code

VT 500_ – 1X/ *

Amplifier with one ramp time:
for valve type 4WRE 6 ..-1X **= 5**
for valve type 4WRE 10 ..-1X **= 6**

Amplifier with five ramp times:
for valve type 4WRE 6 ..-1X **= 7**
for valve type 4WRE 10 ..-1X **= 8**

Further details in clear text

1X = Series 10 to 19
(10 to 19: unchanged technical data and pin assignment)

© 2002
by Bosch Rexroth AG, Industrial Hydraulics, D-97813 Lohr am Main

All rights reserved. No part of this document may be reproduced or stored, processed, duplicated or circulated using electronic systems, in any form or by any means, without the prior written authorisation of Bosch Rexroth AG.
In the event of contravention of the above provisions, the contravening party is obliged to pay compensation.

This document was prepared with the greatest of care, and all statements have been examined for correctness.
This document is subject to alterations for reason of the continuing further developments of products.
No liability can be accepted for any incorrect or incomplete statements.

Functional description

Command value inputs 1 to 4 can be used to call up command values [1] by controlling the related relays (K1 to K4). The command value voltage is applied either directly via the regulated ± 9 V voltages of the internal power supply unit [12] or via an external command value potentiometer. The following is valid for these inputs: ± 9 V = ± 100 % [1)]. If these four command value inputs are connected directly to the regulated ± 9 V voltages, then four different command values can be set on potentiometers "w1" to "w4". When external command value potentiometers are used on these inputs, the internal potentiometers act as attenuators or limiters, unless they are set to their maximum values.

External command value potentiometers

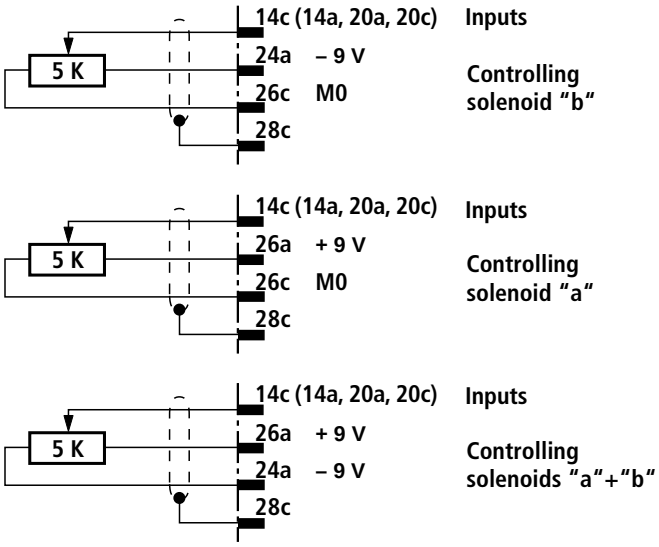

Which command value is being called up is indicated by LEDs "H1" to "H4". If more than one command value is called up at a time, the input with the highest number has priority. Example: If command value 1 and command value 3 are activated at the same time, command value 3 is effective.

A further output of the card provides the supply voltage for the command value call-ups and can be changed over from + 9 V to – 9 V using relay K6 [1)].

With amplifier variants with 5 ramp times (VT 5007 and VT 5008), an adjustable ramp time ("t1" to "t4") is assigned to each of the four call-up command values. If no command value is called up, time "t5" is effective for these amplifiers. With amplifier variants with one ramp time (VT 5005 and VT 5006) time "t" is effective for all command values.

All the relays on the card are switched with 24 VDC (smoothed).

Command value input 5 is a differential input (0 to ± 10 V). If the command value is provided by external electronics with a different reference potential, this input must be used. When the command value voltage is applied or withdrawn, care must be taken to ensure that both signal cables are connected to or disconnected from the input.

Before being passed on, all command values are summated with the correct amount and sign [3].

The downstream ramp generator [4] generates a ramp-shaped output signal from a step-change-like input signal. The time constant of the output signal can be adjusted by means of potentiometers "t" or "t1" to "t5". The given ramp time refers to a command value step-change of 100 % and can be approx. 1 s or 5 s depending on the jumper setting (J5, J6). If a command value step-change of less than 100 % is applied to the input of the ramp generator, the ramp time shortens accordingly.

External time potentiometer and ramp "off"

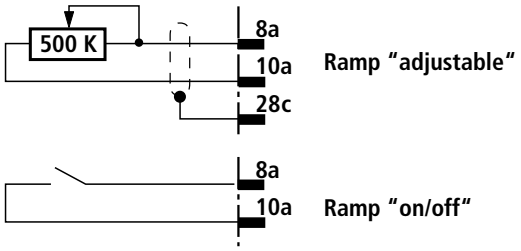

Note:
When an external time potentiometer is used, the internal ramp time potentiometer must be set to maximum. The maximum ramp time shortens, because the resistance value of the external potentiometer is connected in parallel to that of the internal potentiometer (approx. 500 kΩ)!

The ramp time is set to its minimum value (approx. 30 ms) by switching relay K5 or by means of an external bridge.

The output signal of ramp generator [4] is fed in parallel to summator [6] and step function generator [5]. At command value voltages > 100 mV step function generator [5] creates a polarity-dependent step-change signal that is added to the output signal of the ramp generator. This step function causes a fast movement through the overlap range of the valve spool. At greater command value voltages the step function generator outputs a constant output signal.

The output signal of summator [6] is the position command value and is fed to PID-controller [7], measuring socket "w" on the front panel of the card and connection 4a (command value after ramp/external limitation potential). A voltage of – 6 V at command value measuring socket "w" corresponds to a command value of + 100 %.

The PID-controller is specifically optimised for valve type 4WRE (series 1X). The current output stages are controlled in relation to the difference between the position command value and the actual position value. A positive command value signal at the amplifier input controls the output stage for solenoid "a", a negative command value signal the output stage for solenoid "b".

Inductive position transducer [13] senses the position of the valve spool. The AC voltage signal of the position transducer is converted by oscillator/demodulator [11] and fed to the PID-controller as actual position value.

The zero point of the position transducer (actual value zero point) can be adjusted by means of potentiometer "Zx" (on the printed circuit board). The gain of the actual position value is factory-calibrated and must not be changed (± 6 V = max. valve spool stroke).

A signal of > 8.5 V at the enable input enables the output stages (signalled by yellow LED "H11" on the front panel). By setting jumper J7 the output stages can be continuously enabled independently of the state of the enable input. In this case, the enable input is ineffective.

LED "H12" (ready for operation) lights during trouble-free operation; positively when:
- the enable signal is applied,
- the internal ± 9 V voltage supply is correct (amplitude and symmetry),
- the solenoid cables have no short-circuit and
- there is no cable break of the position transducer cables.

In the case of a fault, the two output stages are immediately de-energised and the signal "ready for operation" is reset. After correction of the fault, the card is immediately operable; LED "H12" lights up again.

[1)] = Reference potential for command values 1 to 4 is M0 (measurement zero).

[ ] = Cross-reference to block circuit diagrams on pages 3 and 4

Block circuit diagram / pin assignment: VT 5005 and VT 5006 (from series 17)

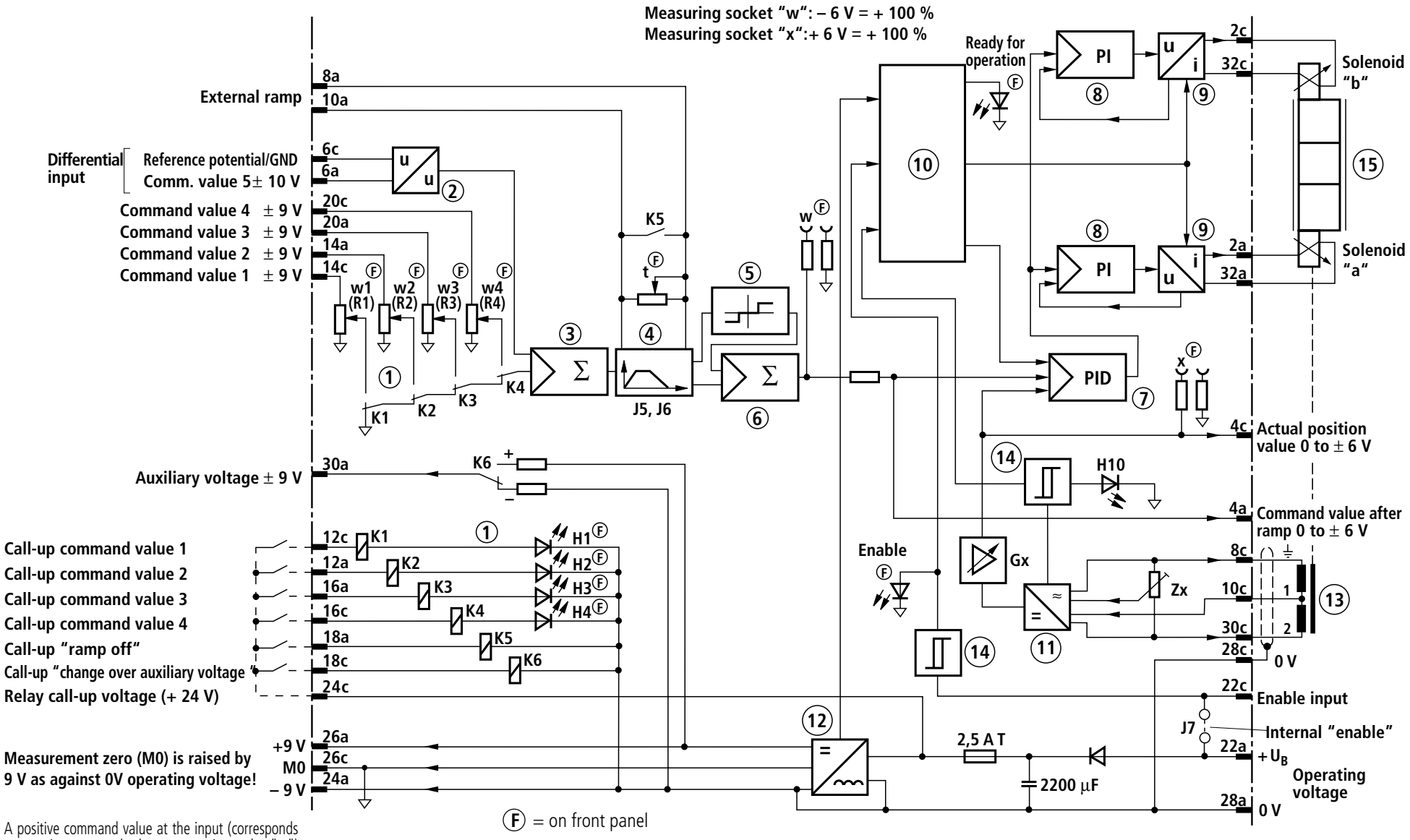

(F) = on front panel

A positive command value at the input (corresponds to negative command value at measuring socket "w") causes an increase in current in solenid "a" and a flow from P to B and from A to T.

A negative command value at the input (corresponds to positive command value at measuring socket "w") causes an increase in current in solenoid "b" and a flow from P to A and from B to T.

H1 to **H4** = LED lamps for command value call-ups
K1 to **K6** = Call-up relays
R1 to **R4** = Command value potentiometers
t = Ramp time

1 Command values
2 Differential amplifier
3; **6** Summator
4 Ramp generator
5 Step function
7 Spool position controller
8 Current regulator
9 Output stage
10 Monitor
11 Oscillator/demodulator
12 Power supply unit
13 Position transducer
14 Threshold value detector
15 Proportional valve

Block circuit diagram / pin assignment: VT 5007 and VT 5008 (from series 17)

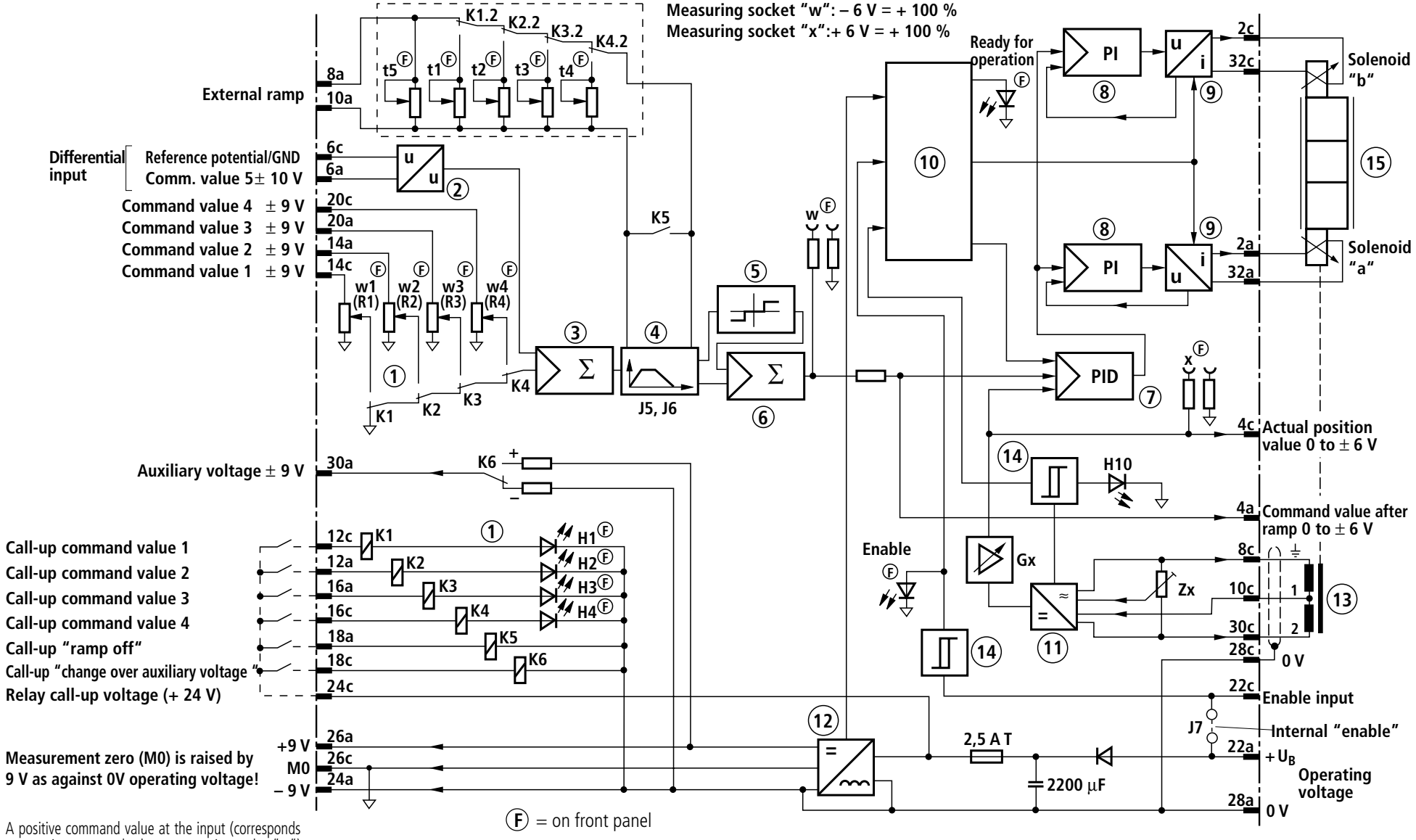

Ⓕ = on front panel

A positive command value at the input (corresponds to negative command value at measuring socket "w") causes an increase in current in solenid "a" and a flow from P to B and from A to T.

A negative command value at the input (corresponds to positive command value at measuring socket "w") causes an increase in current in solenoid "b" and a flow from P ro A and from B to T.

H1 to **H4** = LED- lamp for command value call-ups
K1 to **K6** = Call-up relay
R1 to **R4** = Command value potentiometers
t1 to **t5** = Ramp times

1 Command values
2 Differential amplifier
3; **6** Summators
4 Ramp generator
5 Step function
7 Spool position controller
8 Current regulator
9 Output stage
10 Monitor
11 Oscillator/demodulator
12 Power supply unit
13 Position transducer
14 Threshold value detector
15 Proportional valve

Technical data (for applications outside these parameters, please consult us!)

Operating voltage		U_O	24 VDC + 40 % – 5 %
Operating range:			
– Upper limit value		$u_O(t)_{max}$	35 V
– Lower limit value		$u_O(t)_{min}$	22 V
Power consumption		P_S	< 50 VA
Current consumption		I	< 2 A
Fuse		I_F	2.5 A T
Inputs:			
– Command values 1 to 4		U_i	± 9 V (reference potential is M0)
– Command value 5		U_i	0 to ± 10 V
– Enable			
• active		U_E	> 8.5 V
• not active		U_E	< 6.5 V
Relay data:			
– Nominal voltage		U	Operating voltage U_O
– Response voltage		U	16.8 V
– Release voltage		U	2.4 V
– Coil resistance		R	2150 Ω
Ramp time (adjustment range)		t	30 ms to approx. 1 s or 5 s (± 20 % each)
Outputs:			
– Output stage			
• Solenoid current/resistance	VT 5005	I_{max}	1.8 A ± 20 %; $R_{(20)}$ = 5,4 Ω
	VT 5006	I_{max}	2.2 A ± 20 %; $R_{(20)}$ = 10 Ω
	VT 5007	I_{max}	1.8 A ± 20 %; $R_{(20)}$ = 5,4 Ω
	VT 5008	I_{max}	2.2 A ± 20 %; $R_{(20)}$ = 10 Ω
• Clock frequency		f	Slef-clocking up to approx. 1.5 kHz
– Driver for inductive position transducer			
• Oscillator frequency		f	2.5 kHz ± 10 %
• Max. load capability		I	30 mA
• Voltage amplitude (U_{ss})		U_a	5 V per output
– Regulated voltage		U	± 9 V ± 1 %; ± 25 mA externally loadable
– Measuring sockets			
• Command value "w"		U_w	0 to 7 6 V (– 6 V = + 100 %; + 6 V = – 100 %); R_i = 100 Ω
• Actual position value "x"		U_x	0 to 6 6 V (+ 6 V = + 100 %; – 6 V = – 100 %); R_i = 100 Ω
Type of connection			32-pin male multi-point connector , DIN 41 612, form D
Card dimensions			Euro-card 100 x 160 mm, DIN 41 494
Front panel dimensions:			
– Height			3 HE (128.4 mm)
– Width solder side			1 TE (5.08 mm)
– Width component side			7 TE
Permissible operating temperature range		ϑ	0 to 50 °C
Storage temperature range		ϑ	– 25 to + 85 °C
Weight		m	0.15 kg

Note:
For details regarding **environment simulation tests** in the field of EMC (electro-magnetic compatibility), climate and mechanical stress, see RE 30 095-U (declaration of environmental compatibility).

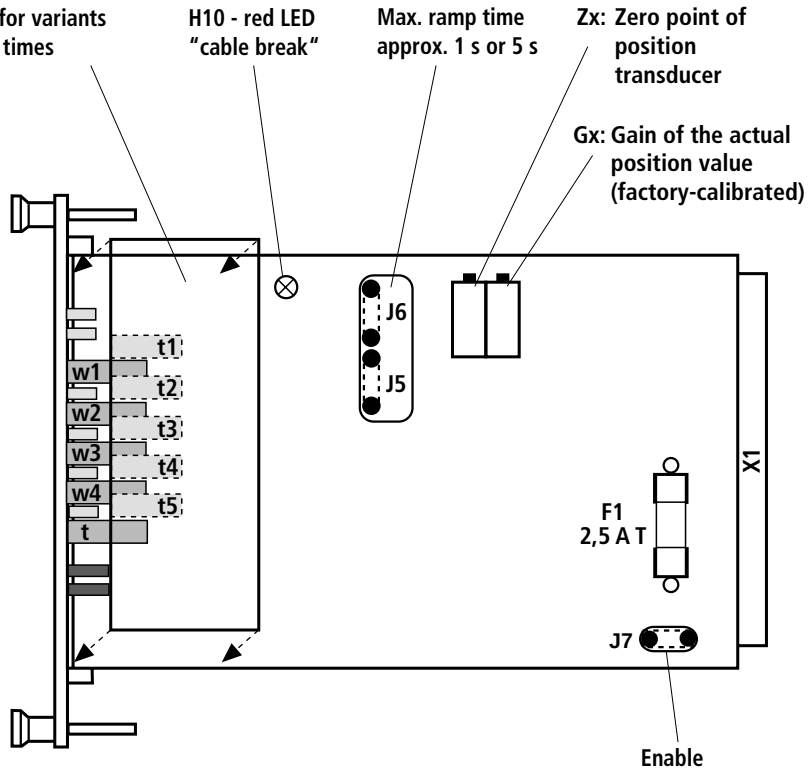

LED lamp "enable" (yellow)
LED lamp "ready for operation" (green)

w1/H1 - command value 1 with LED lamp
w2/H2 - command value 2 with LED lamp
w3/H3 - command value 3 with LED lamp
w4/H4 - command value 4 with LED lamp
t - ramp time (for VT 5005 and VT 5006)
t1 bis **t5** - ramp times (for VT 5007 and VT 5008)
x - measuring socket for actual position value
w - measuring socket for command value

Meaning of jumpers on the card for settings
(label at the back of the front panel)

ramp time		enable		Jx = bridge
◯ • 5 s	J5 J6	◯ • int.	J7	Jx = open
◯ 1 s	J5 J6	◯ ext.	J7	• = delivery state

Ramp time **Enable**

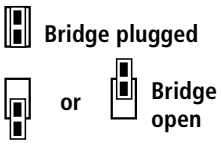

Note:
The circles (◯) are provided to identify settings made by the customer.
The factory setting is identified with "•".

Unit dimensions (dimensions in mm)

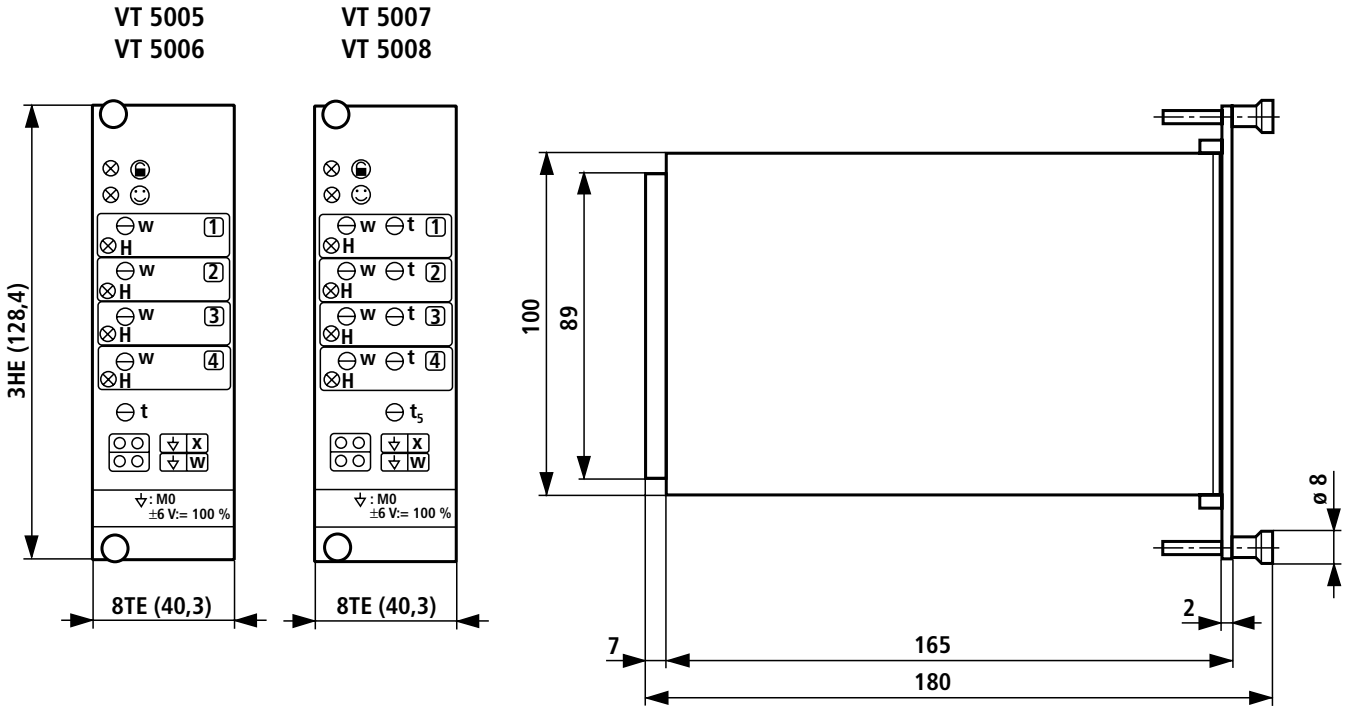

Engineering notes / maintenance instructions / supplementary information

- The amplifier may only be plugged or unplugged when disconnected from the power supply!
- Do not use plugs with free-wheeling diodes or LED lamps for connecting solenoids!
- Measurements on the card may only be taken with instruments $R_i > 100\ k\Omega$!
- The measurement zero (M0) is raised by + 9 V as against the 0V operating voltage and **not isolated**, i.e. – 9 V regulated voltage = 0V operating voltage. Therefore, do **not** connect the measurement zero (M0) with the 0V operating voltage!
- Use relays with gold-plated contacts for switching command values (small voltages, small currents)!
- For switching card relays, use only contacts with a load capability of approx. 40 V, 50 mA ! In the case of external controlling, the control voltage may have a maximum residual ripple content of 10 % !
- Always shield command value cables; connect the shield to the 0V operating voltage on the card side and leave the other end open (risk of earth loops)!
  Recommendation: Also shield solenoid cables!
  For solenoid cables up to 50 m length, use cable type LiYCY 1.5 mm^2.
  For greater lengths, please consult us!
- The distance to aerial lines, radio sources and radar equipment must be at least 1 m!
- Do not lay solenoid and signal cables near power cables!
- Due to the charging current of the smoothing capacitor on the card, back-up fuses must be of the slow-blow type!
- Do not connect the earth sign on the inductive position transducer to ground! (Precondition for the compatibility with previous series!)
- **Caution:** When using the **differential input, both inputs must be** switched on or off **simultaneously**!

Note: Electrical signals brought out via control electronics (e.g. signal "ready for operation") must not be used for switching safety-relevant machine functions!
(See also European standard "Safety requirements for fluid power systems and components – hydraulics", EN 982)

Notes

Bosch Rexroth AG
Industrial Hydraulics

D-97813 Lohr am Main
Zum Eisengießer 1 • D-97816 Lohr am Main
Telefon 0 93 52 / 18-0
Telefax 0 93 52 / 18-23 58 • Telex 6 89 418-0
eMail documentation@boschrexroth.de
Internet www.boschrexroth.de

Bosch Rexroth Limited

Cromwell Road, St Neots,
Cambs, PE19 2ES
Tel: 0 14 80/22 32 56
Fax: 0 14 80/21 90 52
E-mail: info@rexroth.co.uk

The data specified above only serve to describe the product. No statements concerning a certain condition or suitability for a cetain application can be derived from our information. It must be remembered that our products are subject to a natural process of wear and ageing.