Pilot operated, pressure reducing/relieving valve

Capacity:
10 gpm (40 L/min.)

Functional Group:
Products : Cartridges : Reducing/Relieving : 3 Port : Pilot Operated

Model:
PPDB

Product Description

Pilot-operated, pressure reducing/relieving valves reduce a high primary pressure at the inlet (port 2) to a constant reduced pressure at port 1, with a full-flow relief function from port 1 to tank (port 3).

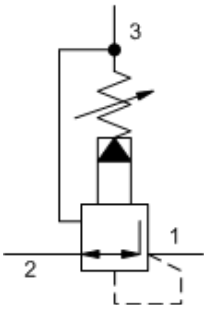

Download

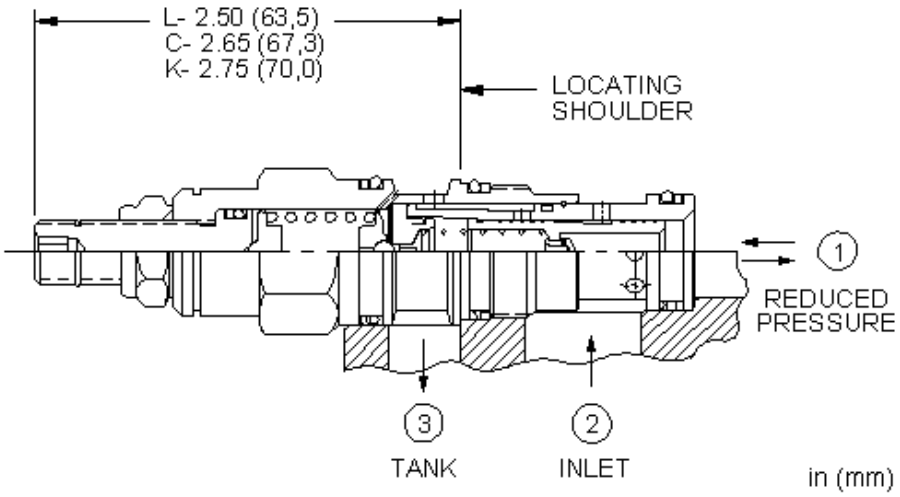

Technical Features

- All three-port pressure reducing and reducing/relieving cartridges are physically interchangeable (i.e. same flow path, same cavity for a given frame size). When considering mounting configurations, it is sometimes recommended that a full capacity return line (port 3) be used with reducing/relieving cartridges.
- Full reverse flow from reduced pressure (port 1) to inlet (port 2) may cause the main spool to close. If reverse free flow is required in the circuit, consider adding a separate check valve to the circuit.
- If pilot flow consumption is critical, consider using direct acting reducing/relieving valves.
- Recommended maximum inlet pressure is determined by the adjustment range. Ranges D, E, N, and Q are tested with a 2000 psi (140 bar) maximum differential between inlet and reduced pressure. Ranges A, B, and H are tested with a 3000 psi (210 bar) maximum differential between inlet and reduced pressure. Ranges C and W are tested with 5000 psi (350 bar) of inlet pressure.
- Pilot operated valves exhibit exceptionally flat pressure/flow characteristics, are very stable and have low hysteresis.
- Pressure at port 3 is directly additive to the valve setting at a 1:1 ratio and should not exceed 5000 psi (350 bar).
- Pilot operated reducing, reducing/relieving valves by nature are not fast acting valves. For superior dynamic response, consider direct acting valves.
- Incorporates the Sun floating style construction to minimize the possibility of internal parts binding due to excessive installation torque and/or cavity/cartridge machining variations.

Special Notes

- Maximum pressure differentials for spring ranges: A and B are 3000 psi (210 bar) N and Q are 2000 psi (140 bar) W is 5000 psi (350 bar)inlet pressure
- For cartridges configured with an O control (panel mount handknob), a .75 in. (19 mm) diameter hole is required in the panel.

Technical Data

	U.S. Units	Metric Units
Cavity	T-11A	
Capacity	10 gpm	40 L/min.
Control Pilot Flow	7 - 10 in³/min.	0,11 - 0,16 L/min.
Factory Pressure Settings Established at	blocked control port (dead headed)	
Maximum Operating Pressure	5000 psi	350 bar
Series (from Cavity)	Series 1	
Adjustment - Number of Clockwise Turns to Increase Setting	5	
Valve Hex Size	7/8 in.	22,2 mm
Valve Installation Torque	30 - 35 lbf ft	40 - 50 Nm
Adjustment Screw Internal Hex Size	5/32 in.	4 mm
Adjustment Locknut/Cap Hex Size	9/16 in.	15 mm
Adjustment Nut Torque	80 - 90 lbf in.	9 - 10 Nm
Seal Kits - Cartridge	Buna: 990-011-007	
Seal Kits - Cartridge	Viton: 990-011-006	
Model Weight	0.33 lb.	0.15 kg.

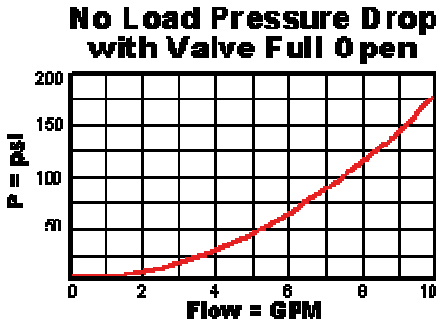

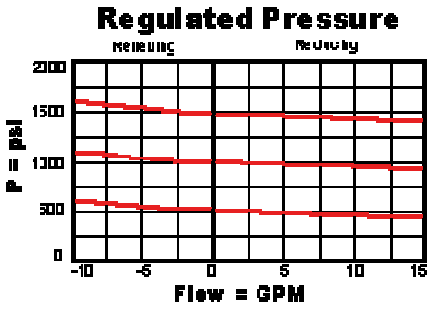

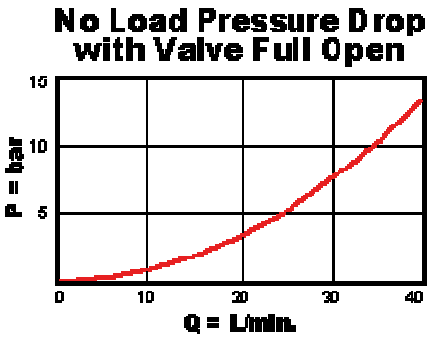

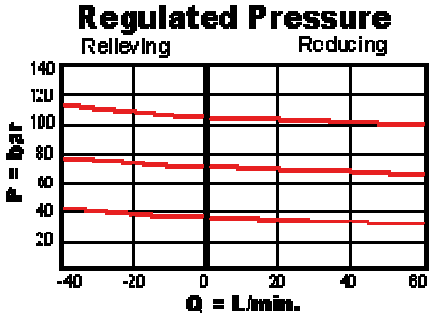

PPDB-LAN

Control

Preferred Options

L Standard Screw Adjustment

Standard Options

C* Tamper Resistant - Factory

Adjustment Range

Preferred Options

A 100 - 3000 psi (7 - 210 bar), 200 psi (14 bar) Standard Setting

W 150 - 4500 psi (10,5 - 315 bar), 200 psi (14 bar)

Seal Material

Preferred Options

N Buna-N

Standard Options

V Viton

Material/Coating Modifier

Preferred Options

No modifier (standard material with no special coating)

Special Options

/AP Stainless Steel, Passivated

Set

K Handknob

Standard Setting

Standard Options

B 50 - 1500 psi (3,5 - 105 bar), 200 psi (14 bar) Standard Setting

N 60 - 800 psi (4 - 55 bar), 200 psi (14 bar) Standard Setting

Q 60 - 400 psi (4 - 28 bar), 200 psi (14 bar) Standard Setting

Control: C

Control: L

Control: Y

Our corrosion resistant product line is growing! If you are interested in a corrosion resistant option for this model, please contact Sun.

Additional Options (Click Here)

Control

M Capped Screw Adjustment with Lockwire Holes

O Handknob with Panel Mount

Q* Capped and Lockwired

W* Max. Setting Limiter

Adjustment Range

C 150 - 6000 psi (10,5 - 420 bar), 200 psi (14 bar) Standard Setting

D 25 - 800 psi (1,7 - 55 bar), 200 psi (14 bar) Standard Setting

E 25 - 400 psi (1,7 - 28 bar), 200 psi (14 bar) Standard Setting

H 30 - 3000 psi (2 - 210 bar), 200 psi (14 bar) Standard Setting

J 25 - 1500 psi (1,7 - 105 bar), 200 psi (14 bar) Standard Setting

K 75 - 1500 psi (5 - 105 bar), 200 psi (14 bar) Standard Setting

O 15 - 400 psi (1 - 28 bar), 200 psi (14 bar) Standard Setting

P 40 - 400 psi (2,8 - 28 bar), 200 psi (14 bar) Standard Setting

Seal Material

If the modifier is /AP, the control must be C, L or Y

* Special Setting required, specify at time of order
Customer specified setting stamped on hex $ 2.00

Related Models

PPDB8

Related Documents (opens in new window):

- Explanation of Sun cartridge control options - US units.
- Explanation of Sun cartridge control options - metric units.

Copyright © 2002-2012 Sun Hydraulics Corporation. All rights reserved.
Terms and Conditions - **ISO Certification** - **Statement of Privacy**