Courtesy of CMA/Flodyne/Hydradyne ▪ Motion Control ▪ Hydraulic ▪ Pneumatic ▪ Electrical ▪ Mechanical ▪ (800) 426-5480 ▪ www.cmafh.com

4/2 and 4/3 proportional directional valves direct operated, with electrical position feedback, without/with integrated electronics (OBE)

RE 29061/10.05 1/20
Replaces: 02.03

Types 4WRE and 4WREE

Nominal sizes 6 and 10
Component series 2X
Maximum operating pressure 315 bar
Maximum flow: 80 l/min (NS6)
180 l/min (NS10)

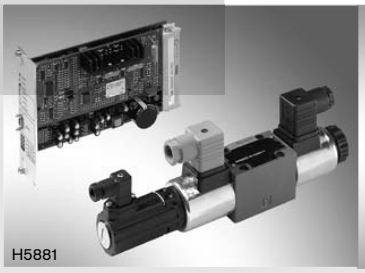

Type 4WRE 6 …-2X/G24K4/V with plug-in connectors and associated control electronics (separate order)



Type 4WREE 10 …-2X/G24K31/A1V with integrated electronics (OBE)

Overview of contents

Contents	Page
Features	1
Ordering details	2
Symbols	3
Function, section	4
Technical data	5, 6
Control electronics	6
Electrical connections, plug-in connectors	7, 8
Integrated electronics (OBE) for type 4WREE	8, 9
Characteristic curves	10...15
Unit dimensions	16...19

Features

- Direct operated proportional directional valve with electrical posisiton feedback and integrated electronics (OBE) for type 4WREE
- Closed loop control of the direction and size of a flow
- Operation is by proportional solenoids with a central thread and removable coil
- For subplate mounting: Porting pattern to ISO 4401
  Subplates to catalogue sheets RE 45052 (NS6) or RE 45054 (NS10), separate order, see pages 16 ...19
- Spring centred control spool
- Control electronics
  - 4WREE
    - integrated electronics (OBE) with voltage input or current input (A1 resp. F1)
  - 4WRE (4/3 version), separate order:
    - digital or analogue amplifier in Eurocard format
    - analogue module amplifier
  - 4WRE…A (4/2 version), separate order:
    - analogue module amplifier

For information regarding the available spare parts see:
www.boschrexroth.com/spc

Courtesy of CMA/Flodyne/Hydradyne ▪ Motion Control ▪ Hydraulic ▪ Pneumatic ▪ Electrical ▪ Mechanical ▪ (800) 426-5480 ▪ www.cmafh.com

Ordering details

4WRE | | | | **–2X/ G24** | / | **V** | *

Without integrated electronics (OBE) **= No code**
With integrated electronics (OBE) **= E**

Nominal size 6 **= 6**
Nominal size 10 **= 10**

Spool symbols

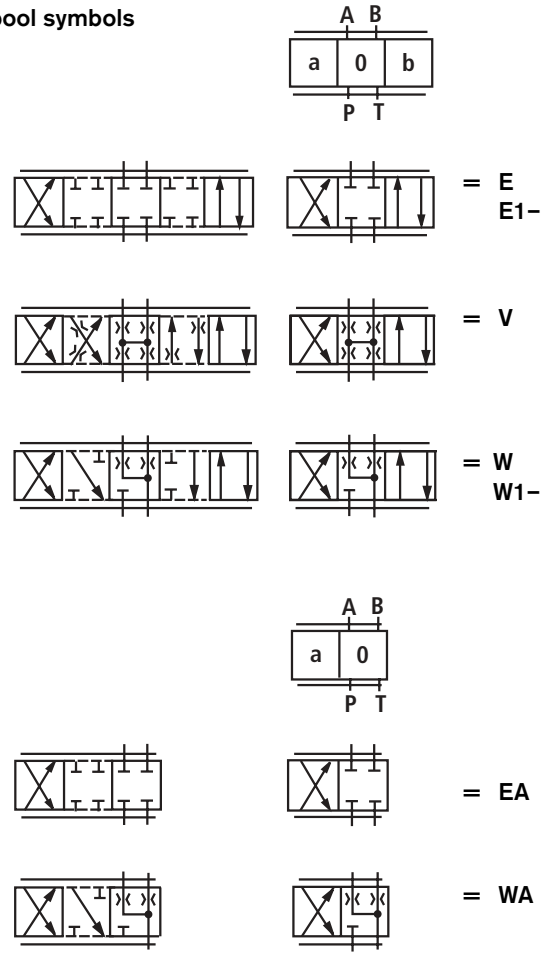

With symbols E1and W1:
P → A: $q_{V\,max}$ B → T: $q_V/2$
P → B: $q_V/2$ A → T: $q_{V\,max}$

Note:
For spools W and WA there is, in the neutral position, a connection between A to T and B to T with approx. 3 % of the relevant nominal cross-section.

Further details in clear text

Seal material
V = FKM seals, suitable for mineral oil (HL, HLP) to DIN 51524

Electronic interfaces A1 or F1
For 4WREE
A1 = Command value input ± 10 VDC
F1 = Command value input 4 to 20 mA
No code = For 4WRE

Electrical connections
For 4WRE:
K4 = **Without** plug-in connector, with component plug to DIN EN 175301-803
Plug-in connector (solenoid, position transducer). separate order, see page 7
For 4WREE:
K31 = **Without** plug-in connector, with component plug to DIN EN 175201-804
Plug-in connector – separate order, see page 8

G24 = Power supply voltage 24 VDC

2X = Component series 20 to 29 (20 to 29: unchanged installation and connection dimensions)

Nominal flow at a valve pressure differential $\Delta p = 10$ bar

NS6
08 = 8 l/min
16 = 16 l/min
32 = 32 l/min
NS10
25 = 25 l/min
50 = 50 l/min
75 = 75 l/min

Courtesy of CMA/Flodyne/Hydradyne ▪ Motion Control ▪ Hydraulic ▪ Pneumatic ▪ Electrical ▪ Mechanical ▪ (800) 426-5480 ▪ www.cmafh.com

Symbols

Proportional directional valves without integrated electronics

Type 4WRE…

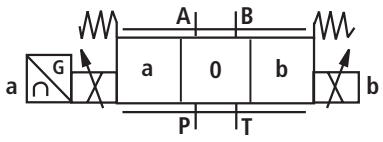

Type 4WRE…**A**…

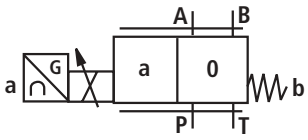

Proportional directional valves with integrated electronics

Type 4WREE…

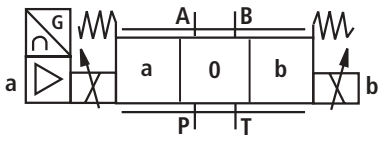

Type 4WREE…**A**…

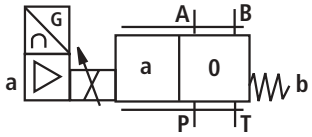

Courtesy of CMA/Flodyne/Hydradyne ▪ Motion Control ▪ Hydraulic ▪ Pneumatic ▪ Electrical ▪ Mechanical ▪ (800) 426-5480 ▪ www.cmafh.com

Function, section

The 4/2 and 4/3 proportional directional valves are direct operated components of subplate mounting design. They are operated by proportional solenoids with central thread and removalbe coil. The solenoids are optionally controlled by either external electronics (type 4WRE) or by the integrated electronics (type 4WREE).

Design:

The valve basically consists of:

- Housing (1) with mounting face
- Control spool (2) with compression springs (3 and 4) and spring plates (X1 and X2)
- Solenoids (5 and 6) and pole tubes (P1 and P2) with central thread
- Position transducer (7)
- Optional integrated control electronics (8)
- The mechanical zero point adjustment (9) is accessible via the Pg13.5 and the electrical zero point is accessible via the Pg7 (10) (type 4WREE)

Function:

- With the solenoids (5 and 6), de-energised, the control spool (2) is held in the central position by the compression springs (3 and 4) between the spring plates (X1 and X2)
- Direct operation of the control spool (2) by energising one of the proportional solenoids, e.g. control of solenoid "b" (6)
  - → Movement of the control spool (2) to the left in proportion to the electrical input signal
  - → Connection from P to A and B to T via orifice-like cross-sections with progressive flow characteristics
- De-energising of solenoids (6)
  - → The control spool (2) is returned to the central position via the compression spring (3)

In the de-energised condition the spool (2) is held in a mechanical centre position by the solenoid return springs. This, for the spool symbol "V", does not relate to the hydraulic centre position! When the electrical valve closed loop control circuit is closed then the spool is positioned in the hydraulic centre position.

Type 4WRE 6…-2X/…

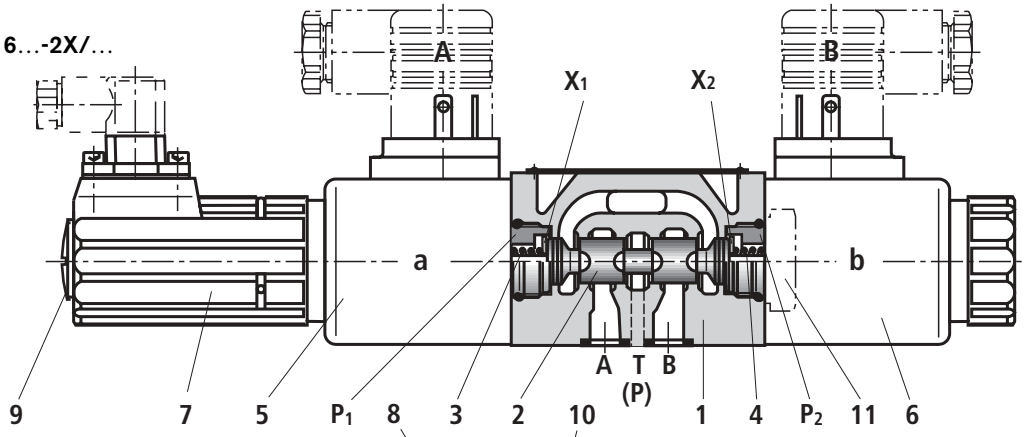

Type 4WREE 6…-2X/…

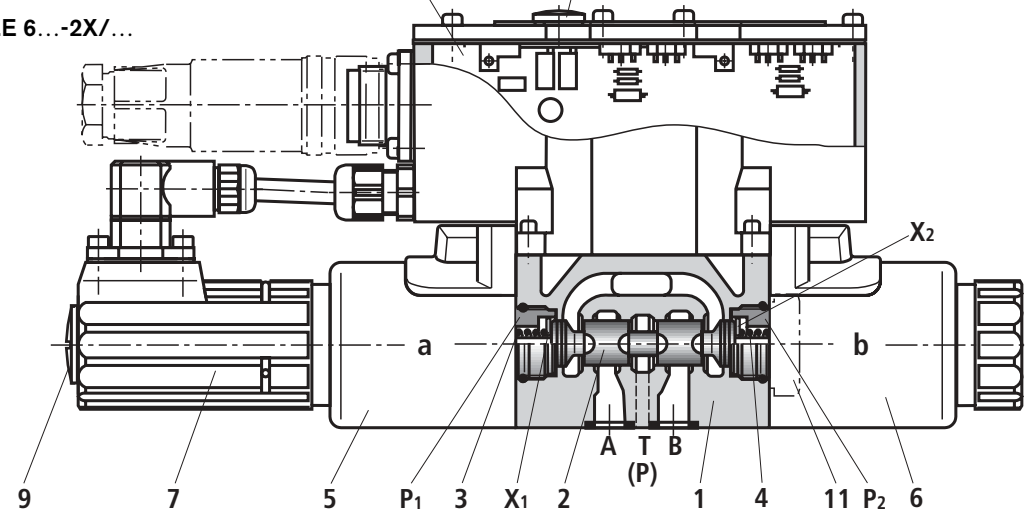

Valve with 2 switching positions: (type 4WRE…**A**…)

The function of this valve version is basically the same as that of the valve with 3 switched positions. The 2 switched position valves are however only fitted with solenoid "a" (5). a plug (11) is fitted in place on the 2nd proportional solenoid.

☞ **Note for type 4WRE 6…-2X/…**

Draining of the tank line is to be prevented. Taking the insallation conditions into account a back pressure is to be fitted (back pressure approx. 2 bar).

Courtesy of CMA/Flodyne/Hydradyne ▪ Motion Control ▪ Hydraulic ▪ Pneumatic ▪ Electrical ▪ Mechanical ▪ (800) 426-5480 ▪ www.cmafh.com

Technical data (for applications outside these parameters, please consult us!)

General

Nominal size		NS	**6**	**10**
Installation			optional, preferably horizontal	
Storage temperature range		°C	–20 to +80	
Ambient temperature range	4WRE	°C	–20 to +70	
	4WREE	°C	–20 to +50	
Weight	4WRE	kg	2.2	6.3
	4WREE	kg	2.4	6.5

Hydraulic (measured with HLP46, ϑ_{oil} = 40 °C ± 5 °C and p =100 bar)

Max. operating pressure	Ports A, B, P	bar	315	
	Port T	bar	210	
Nominal flow $q_{V\,nom}$ at Δp = 10 bar		l/min	8, 16, 32	25, 50, 75
Max. permissible flow		l/min	80	180
Pressure fluid			Mineral oil (HL, HLP) to DIN 51524 other pressure fluids on request!	
Pressure fluid temperature range		°C	–20 to +80 (preferably +40 to +50)	
Viscosity range		mm^2/s	20 to 380 (preferably 30 to 46)	
Max. permissible degree of pressure fluid contamination. Cleanliness class to ISO 4406 (c)			class 20/18/15 [1]	
Hysteresis		%	≤ 0.1	
Reversal span		%	≤ 0.05	
Response sensitivity		%	≤ 0.05	
Zero point displacement with changes to the		%/10 K	0.15	
pressure fluid temperature and operating temperature		%/100 bar	0.1	

[1] The cleanliness class stated for the components must be adhered too in hydraulic systems. Effective filtration prevents faults from occurring and at the same time increases the component service life.
For the selection of filters see catalogue sheets RE 50070, RE 50076, RE 50081, RE 50086 and RE 50088.

Courtesy of CMA/Flodyne/Hydradyne ▪ Motion Control ▪ Hydraulic ▪ Pneumatic ▪ Electrical ▪ Mechanical ▪ (800) 426-5480 ▪ www.cmafh.com

Technical data (for applications outside these parameters, please consult us!)

Electrical

Nominal size			NS	**6**	**10**
Voltage type				DC	
Command value signal	Voltage input „A1“		V	±10 (see page 8)	
for 4WREE	Current input „F1“		mA	4 bis 20 (see page 8)	
Solenoid coil	Cold value at 20 °C		Ω	2.7	3.7
resistance	Max. warm value		Ω	4.05	5.55
Duty			%	100	
Max. coil temperature [1]			°C	150	
Electrical connections	4WRE			with component plug DIN EN 175301-803 and ISO 4400	
see pages 7 and 8				plug-in connector to DIN EN 175301-803 and ISO 4400 [2]	
	4WREE			with component plug DIN EN 175201-804	
				plug-in connector DIN EN 175201-804 [2]	
Valve protection to EN 60529				IP65 with mounted and fixed plug-in connector	

Control electronics

For 4WRE 4/3 version					
	Amplifier in Eurocard format [2]		digital	VT-VRPD-2-2X/V0/0 to RE 30126	
			analogue	VT-VRPA2-1-1X/V0 to RE 30119	VT-VRPA2-2-1X/V0 to RE 30119
	Modular amplifier [2]		analogue	VT-MRPA2-1 to RE 30219	VT-MRPA2-2 to RE 30219
For 4WRE…A… 4/2 version					
	Modular amplifier [2]		analogue	VT-MRPA1-1 to RE 30219	VT-MRPA1-2 to RE 30219
For 4WREE				integrated in the valve, see page 9	
	Analogue command value module			VT- SWMA-1-1X/... to RE 29902	
	Analogue command value module			VT-SWMKA-1-1X/... to RE 29903	
	Analogue command value card			VT-SWKA-1-1X/... to RE 30255	
	Digital command value card			VT-HACD -1-1X/... to RE 30143	
Supply voltage	Nominal voltage		VDC	24	
	Lower limiting value		V	19.4	
	Upper limiting value		V	35	
Amplifier power	I_{max}		A	< 2	
consumption	Impulse current		A	3	

[1] Due to the occurring surface temperature of the solenoid coils, the European Standards EN 563 and EN 982 are to be taken into account!

[2] Separate order

☞ **Note:** For details regarding the **environmental simulation test** covering EMC (electromagnetic compatibility), climate and mechanical loading see RE 29061-U (declaration regarding environmental compatibility).

Courtesy of CMA/Flodyne/Hydradyne ▪ Motion Control ▪ Hydraulic ▪ Pneumatic ▪ Electrical ▪ Mechanical ▪ (800) 426-5480 ▪ www.cmafh.com

Electrical connections, plug-in connectors (nominal dimensions in mm)

For type 4WRE (**without** integrated electronics)

Connections on the component plug

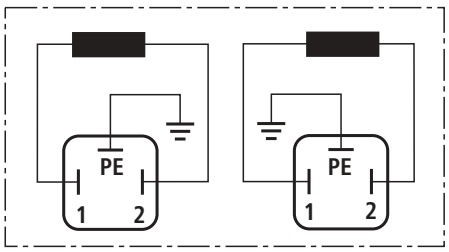

Connections on the plug-in connector

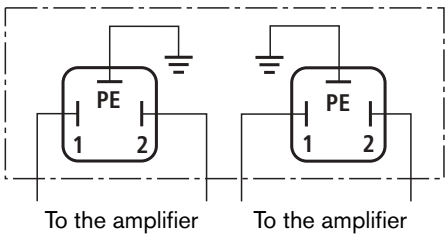

Plug-in connector CECC 75 301-803-A002FA-H3D08-G
to DIN EN 175301-803 and ISO 4400

Solenoid **a**, colour grey
Separate order under Material No. **R901017010**

Solenoid **b**, colour black
Separate order under Material No. **R901017011**

1 fixing screw M3
Tightening torque $M_A = 0{,}5$ Nm

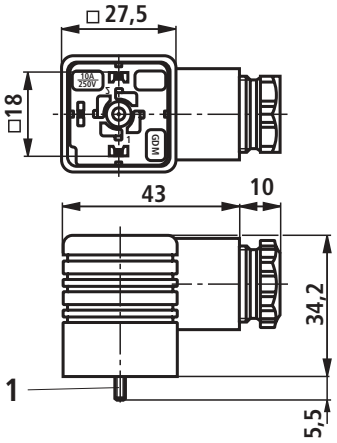

Inductive position transducer

Coil connections

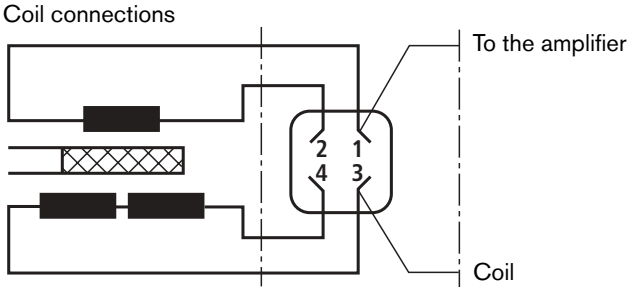

Connection to the plug connector

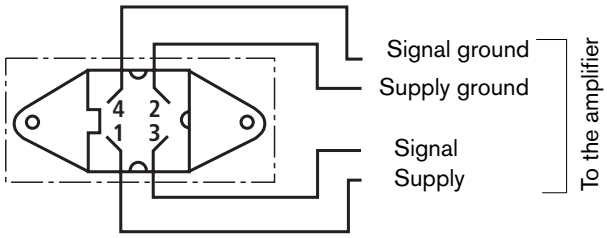

Plug-in connector 4-pin Pg7-G4W1F
Separate order under Material No. **R900023126**
Connection cable:
Recommended: Up to 50 m cable length type LiYCY 4 x 0.25 mm²
Only connect screen to PE on the supply side.

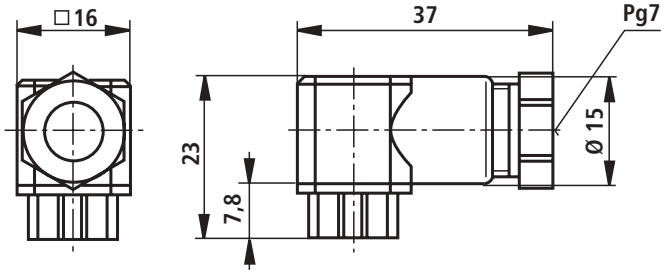

Courtesy of CMA/Flodyne/Hydradyne ▪ Motion Control ▪ Hydraulic ▪ Pneumatic ▪ Electrical ▪ Mechanical ▪ (800) 426-5480 ▪ www.cmafh.com

Integrated electronics (OBE) for type 4WREE (nominal dimensions in mm)

For type 4WREE (**with** integrated electronics (OBE)

Plug-in connector to DIN EN 175201-804
Separate order under Material No. **R900021267** (plastic version)
Angled form – separate order under Material No. **R9000217845**
Fo pin allocation also see block circuit diagram, page 9

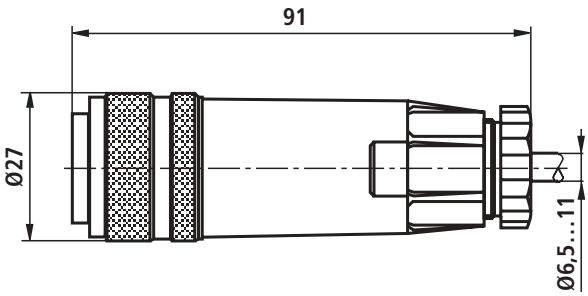

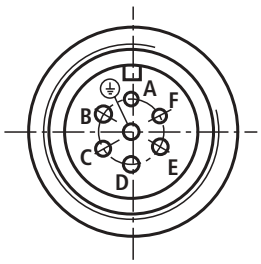

Plug-in connector to DIN EN 175201-804
Separate order under Material No. **R900223890** (metal version)

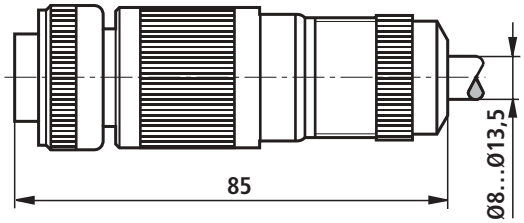

Component plug allocation	Contact	Interface A1 signal	Interface F1 signal
Supply voltage	A	24 VDC (u(t) = 19.4 to 35 V); I_{max} = 2 A	
	B	0 V	
Reference potential actual value	C	ref. contact F; $R_e > 50$ kΩ	ref. contact F; $R_e < 10$ Ω
Differential amplifier input	D	± 10 V command value; $R_e > 50$ kΩ	4 to 20 mA command value; $R_e > 100$ Ω
	E	reference potentional command value	
Measurement output (actual value)	F	± 10 V actual value (limiting load 5 mA)	4 to 20 mA actual value, load resistance max. 300 Ω
	PE	connected with cooling body and valve housing	

Command value: A positive command value 0 to +10 V (or 12 to 20 mA) at D and the reference potential at E results in a flow from P to A and B to T.
A negative command value 0 to −10 V (or 12 to 4 mA) at D and the reference potential at E results in a flow from P to B and A to T.

For a valve with 1 solenoid on side a (e.g. spool variants **EA** and **WA**) a positive command value 0 to +10 V (or 4 to 20 mA) at D and the reference potential at E results in a flow from P to B and A to T.

Actual value: Actual value 0 to +10 V resp. 12 to 20 mA at F and the reference potential at C results in flow from P to A and B to T, 0 to −10 V resp. 4 to 12 mA results in flow from P to B and A to T.
For a valve with 1 solenoid results 4 to 20 mA at F and the reference potential at C results in flow from P to A and B to T.

Connection cable: Recommended: – up to 25 m cable length type LiYCY 7 x 0.75 mm²
– up to 50 m cable length type LiYCY 7 x 1.0 mm²

For outside diameter see plug-in connector sketch

Only connect screen to PE on the supply line.

Courtesy of CMA/Flodyne/Hydradyne ▪ Motion Control ▪ Hydraulic ▪ Pneumatic ▪ Electrical ▪ Mechanical ▪ (800) 426-5480 ▪ www.cmafh.com

Integrated electronics (OBE) for type 4WREE

Block circuit diagram / connection allocation

Interface	Integrated electronics (OBE)	Valve

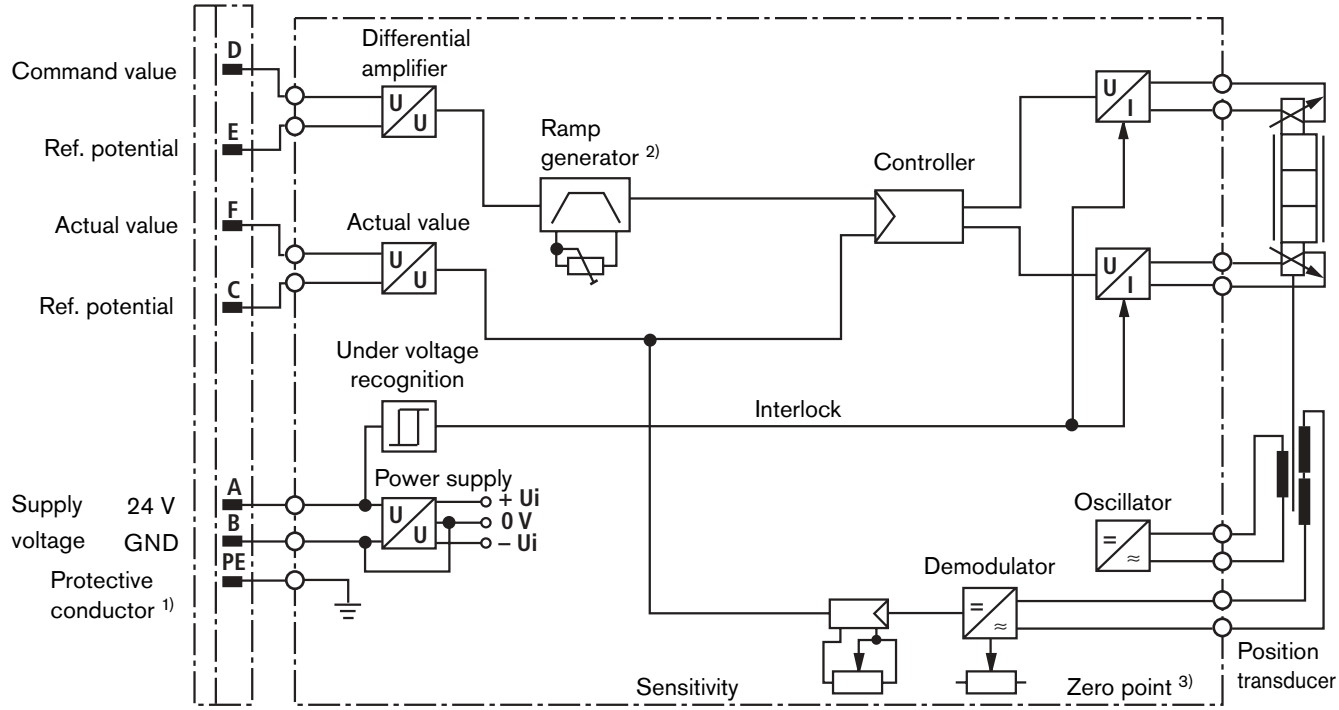

Note: **Electrical signals processed by control electronics (e.g. actual value) must not be used for switching off safety relevant machine functions!**

(Also see the European Standard "Safety requirements of fluid power systems and components – hydraulics", EN 982!)

1) The protective conductor (PE) is connected to the cooling body and the valve housing!

2) The ramp is externally adjustable from 0 to 2.5 s; the same applies for T_{up} and T_{down}

3) Zero point is externally adjustable

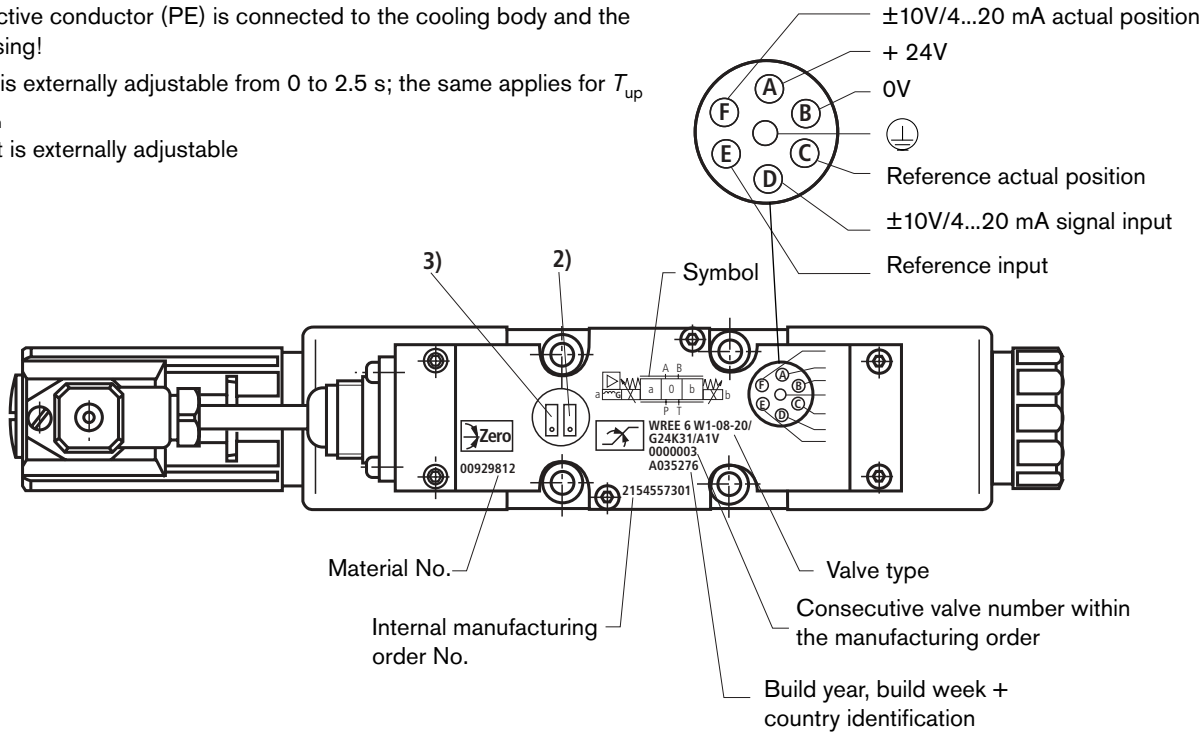

Courtesy of CMA/Flodyne/Hydradyne ▪ Motion Control ▪ Hydraulic ▪ Pneumatic ▪ Electrical ▪ Mechanical ▪ (800) 426-5480 ▪ www.cmafh.com

Characteristic curves for type 4WREE (measured with HLP46, $\vartheta_{oil} = 40\ °C \pm 5\ °C$) **NS6 and 10**

Pressure-signal-characteristic curves (V spool), $p_s = 100$ bar

NS6

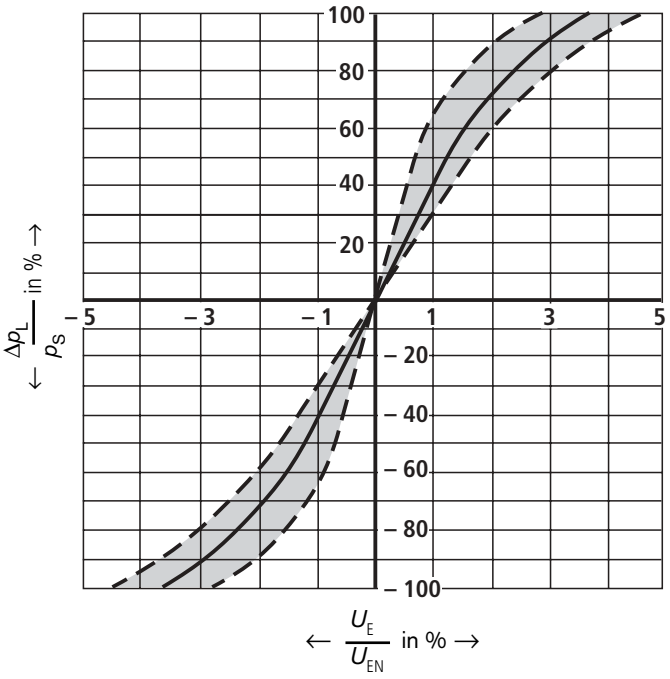

NS10

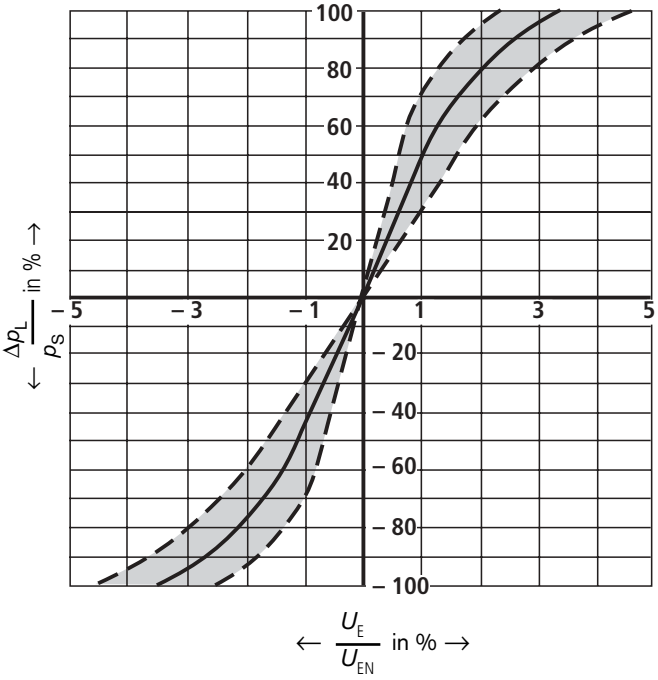

Leakage flow with the spool in the central position

Type 4WREE 6 V32

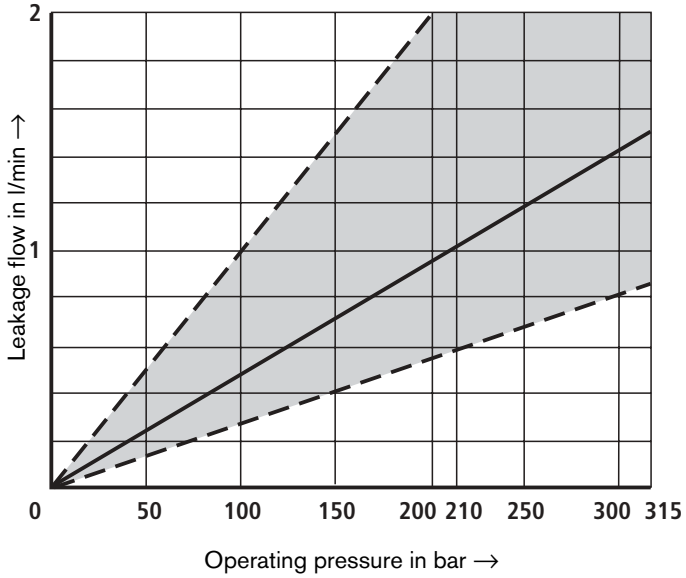

Type 4WREE 10 V75

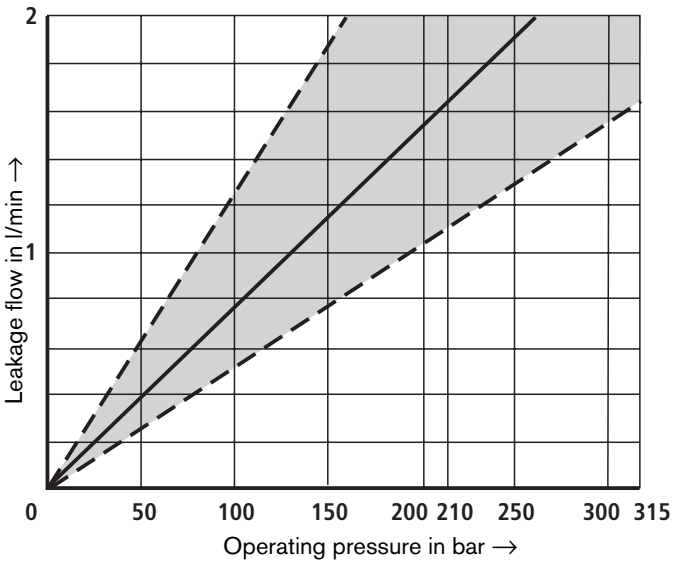

Courtesy of CMA/Flodyne/Hydradyne ▪ Motion Control ▪ Hydraulic ▪ Pneumatic ▪ Electrical ▪ Mechanical ▪ (800) 426-5480 ▪ www.cmafh.com

Characterisitc curves for type 4WREE (measured with HLP46, ϑ_{oil} = 40 °C ± 5 °C and p =100 bar) NS6

8 l/min nominal flow at a 10 bar valve pressure differential

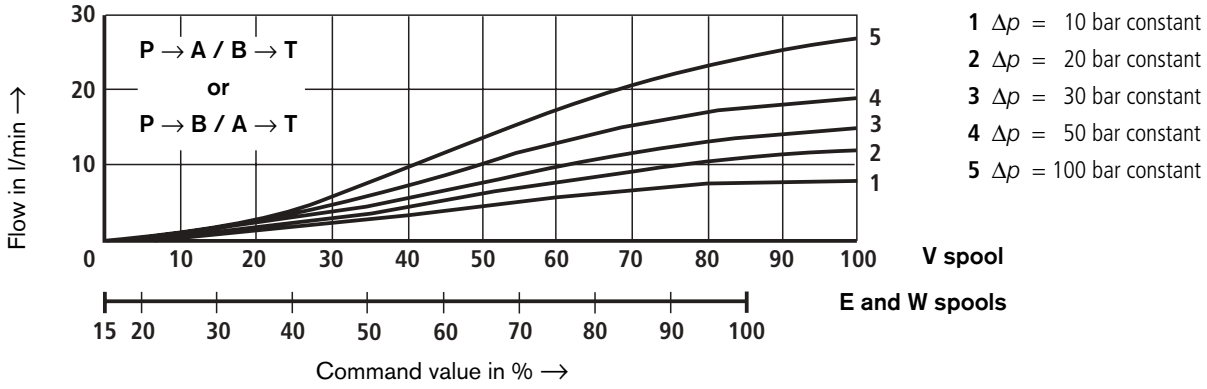

1 Δp = 10 bar constant
2 Δp = 20 bar constant
3 Δp = 30 bar constant
4 Δp = 50 bar constant
5 Δp = 100 bar constant

16 l/min nominal flow at a 10 bar valve pressure differential

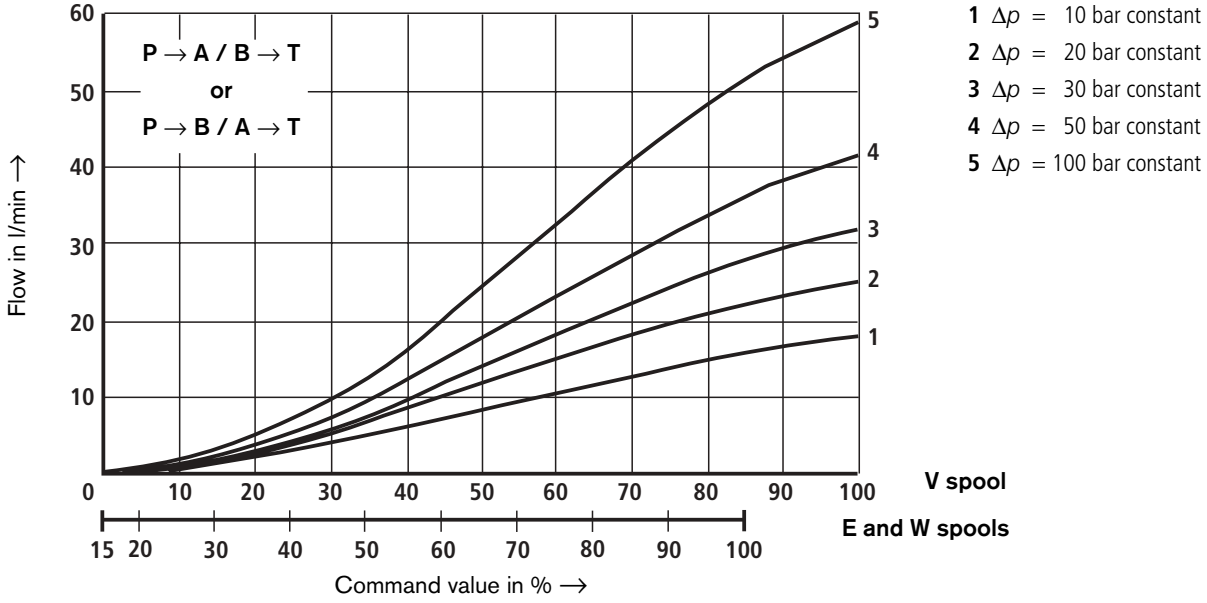

1 Δp = 10 bar constant
2 Δp = 20 bar constant
3 Δp = 30 bar constant
4 Δp = 50 bar constant
5 Δp = 100 bar constant

32 l/min nominal flow at a 10 bar valve pressure differential

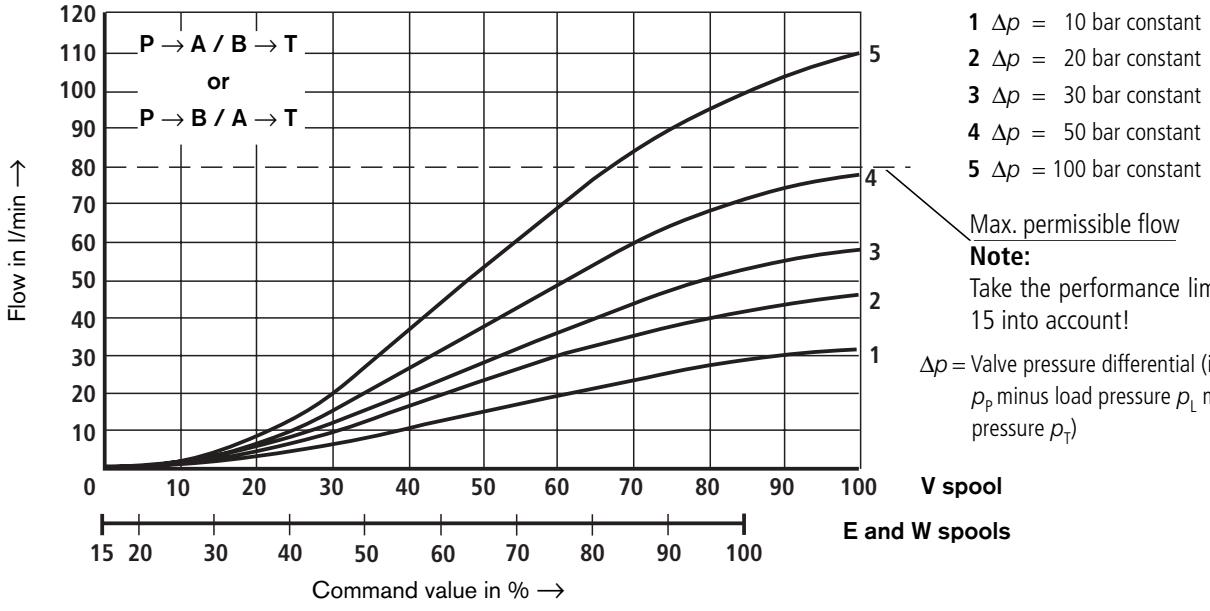

1 Δp = 10 bar constant
2 Δp = 20 bar constant
3 Δp = 30 bar constant
4 Δp = 50 bar constant
5 Δp = 100 bar constant

Max. permissible flow

Note:
Take the performance limits on page 15 into account!

Δp = Valve pressure differential (inlet pressure p_P minus load pressure p_L minus return pressure p_T)

Courtesy of CMA/Flodyne/Hydradyne ▪ Motion Control ▪ Hydraulic ▪ Pneumatic ▪ Electrical ▪ Mechanical ▪ (800) 426-5480 ▪ www.cmafh.com

Charateristic curves for type 4WREE (measured with HLP46, $\vartheta_{oil} = 40\ °C \pm 5\ °C$ and $p = 100$ bar) **NS10**

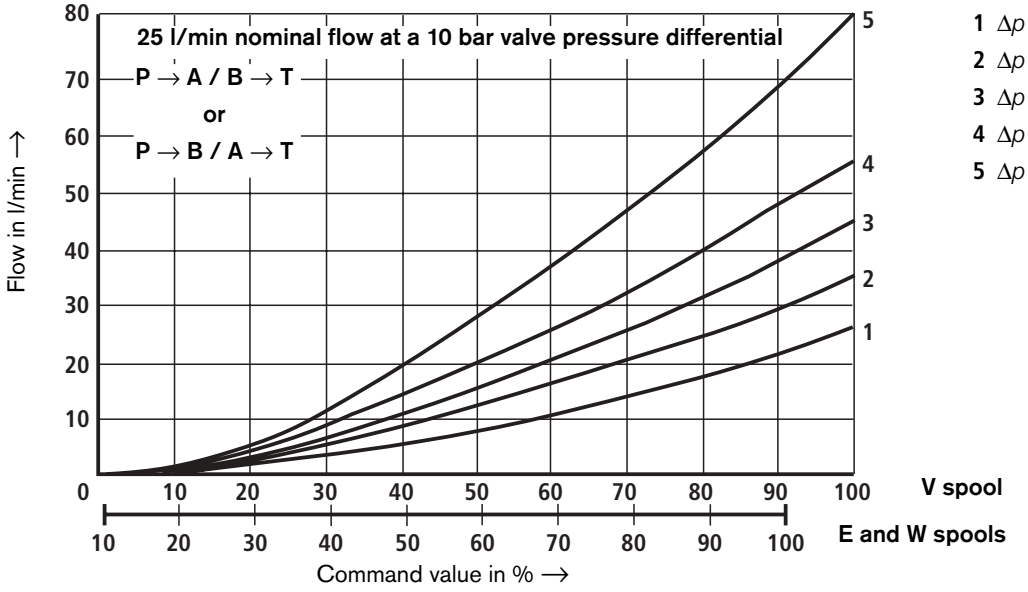

1 Δp = 10 bar constant
2 Δp = 20 bar constant
3 Δp = 30 bar constant
4 Δp = 50 bar constant
5 Δp = 100 bar constant

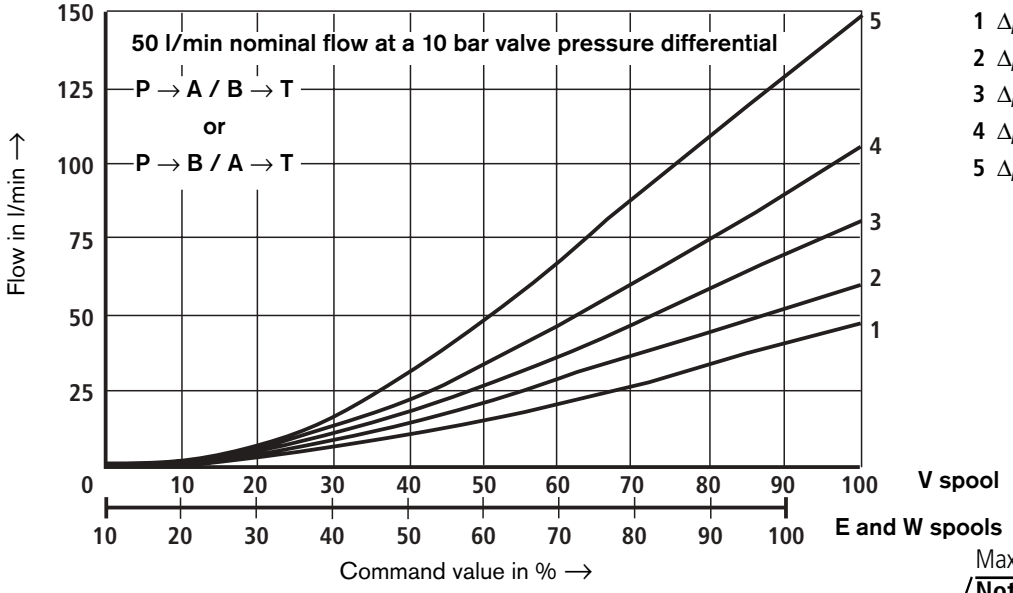

1 Δp = 10 bar constant
2 Δp = 20 bar constant
3 Δp = 30 bar constant
4 Δp = 50 bar constant
5 Δp = 100 bar constant

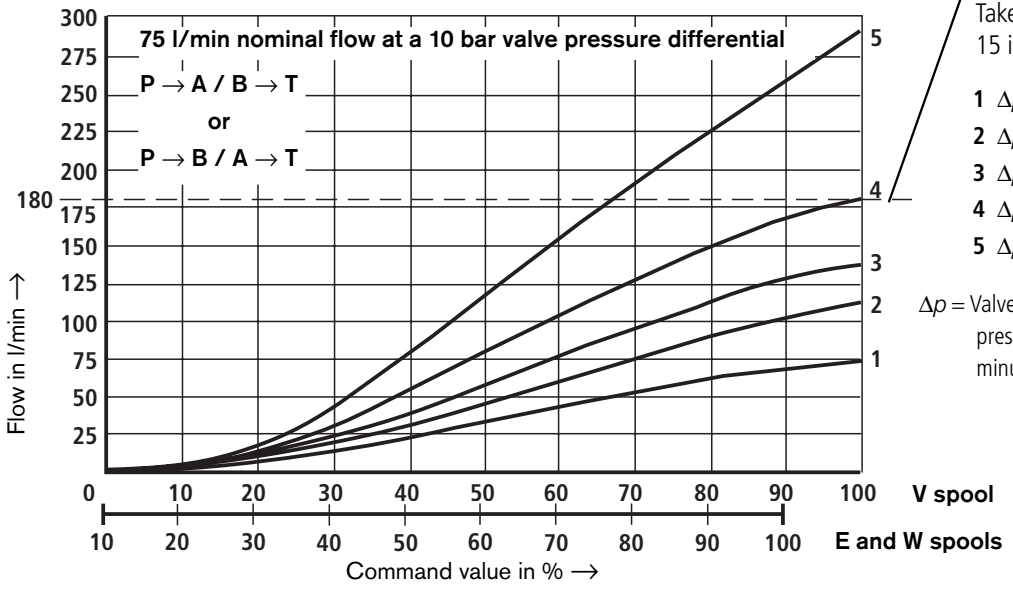

Max. permissible flow

Note:
Take the performance limits on page 15 into account!

1 Δp = 10 bar constant
2 Δp = 20 bar constant
3 Δp = 30 bar constant
4 Δp = 50 bar constant
5 Δp = 100 bar constant

Δp = Valve pressure differential (inlet pressure p_P minus load pressure p_L minus return pressure p_T)

Courtesy of CMA/Flodyne/Hydradyne ▪ Motion Control ▪ Hydraulic ▪ Pneumatic ▪ Electrical ▪ Mechanical ▪ (800) 426-5480 ▪ www.cmafh.com

Transient function with a stepped form of electrical input signal for type 4WREE NS6

(measured with HLP46, ϑ_{oil} = 40 °C ± 5 °C and p_s =10 bar)

4/3 valve version

Spool symbol „E“

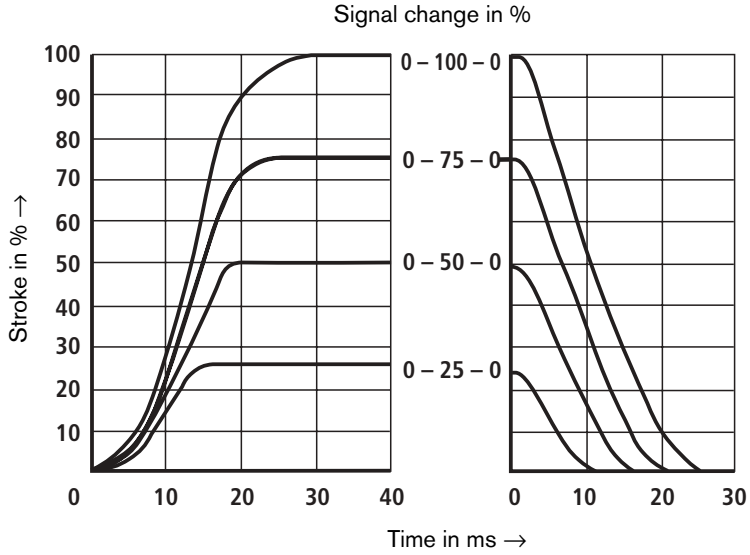

Frequency response characteristic curves for type 4WREE (measured with HLP46, ϑ_{oil} = 40 °C ± 5 °C, p_s = 10 bar) NS6

4/3 valve version

Spool symbol „V“

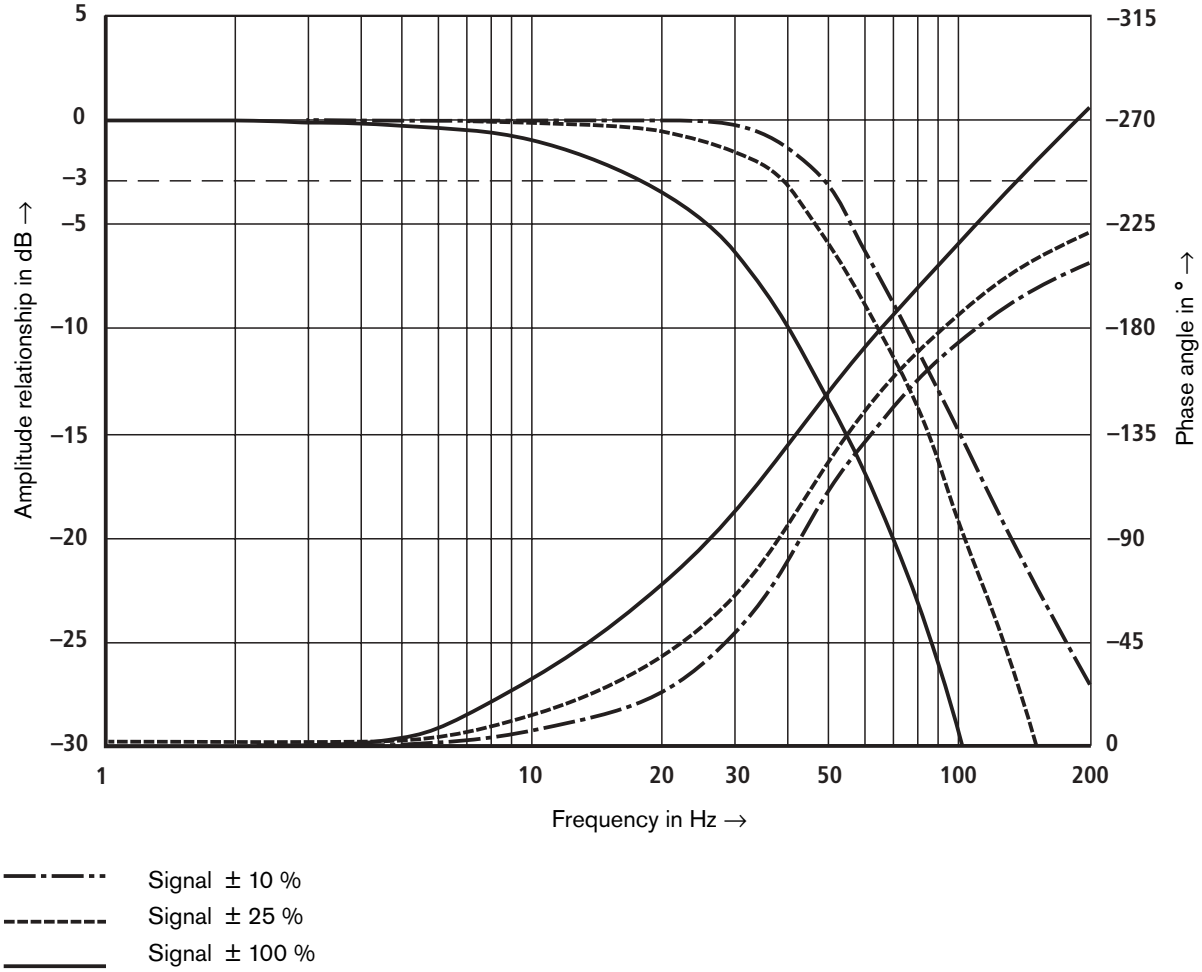

Courtesy of CMA/Flodyne/Hydradyne ▪ Motion Control ▪ Hydraulic ▪ Pneumatic ▪ Electrical ▪ Mechanical ▪ (800) 426-5480 ▪ www.cmafh.com

Transient function with a stepped form of electrical input signal for type 4WREE NS10

(measured with HLP46, ϑ_{oil} = 40 °C ± 5 °C and p_s =10 bar)

4/3 valve version

Spool symbol „E“

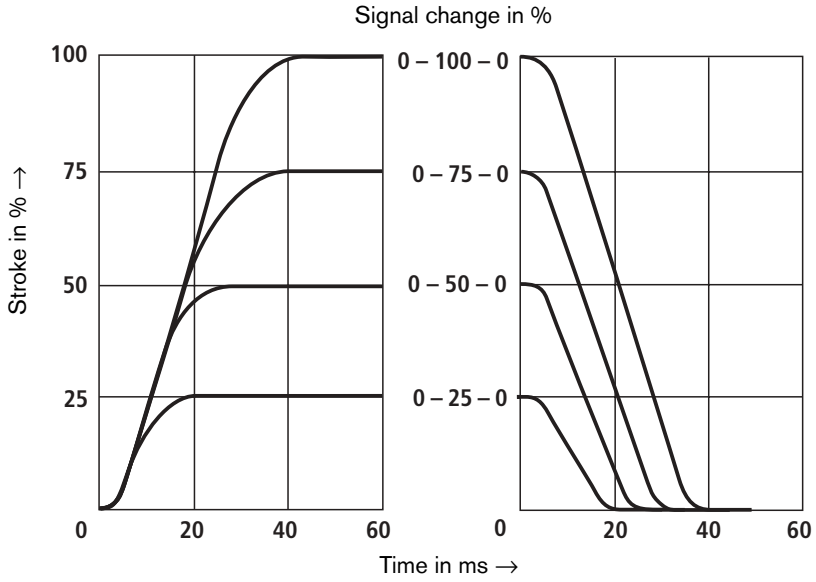

Frequency response characteristic curves for type 4WREE (measured with HLP46, ϑ_{oil} = 40 °C ± 5 °C, p_s = 10 bar) NS10

4/3 valve version

Spool symbol „V“

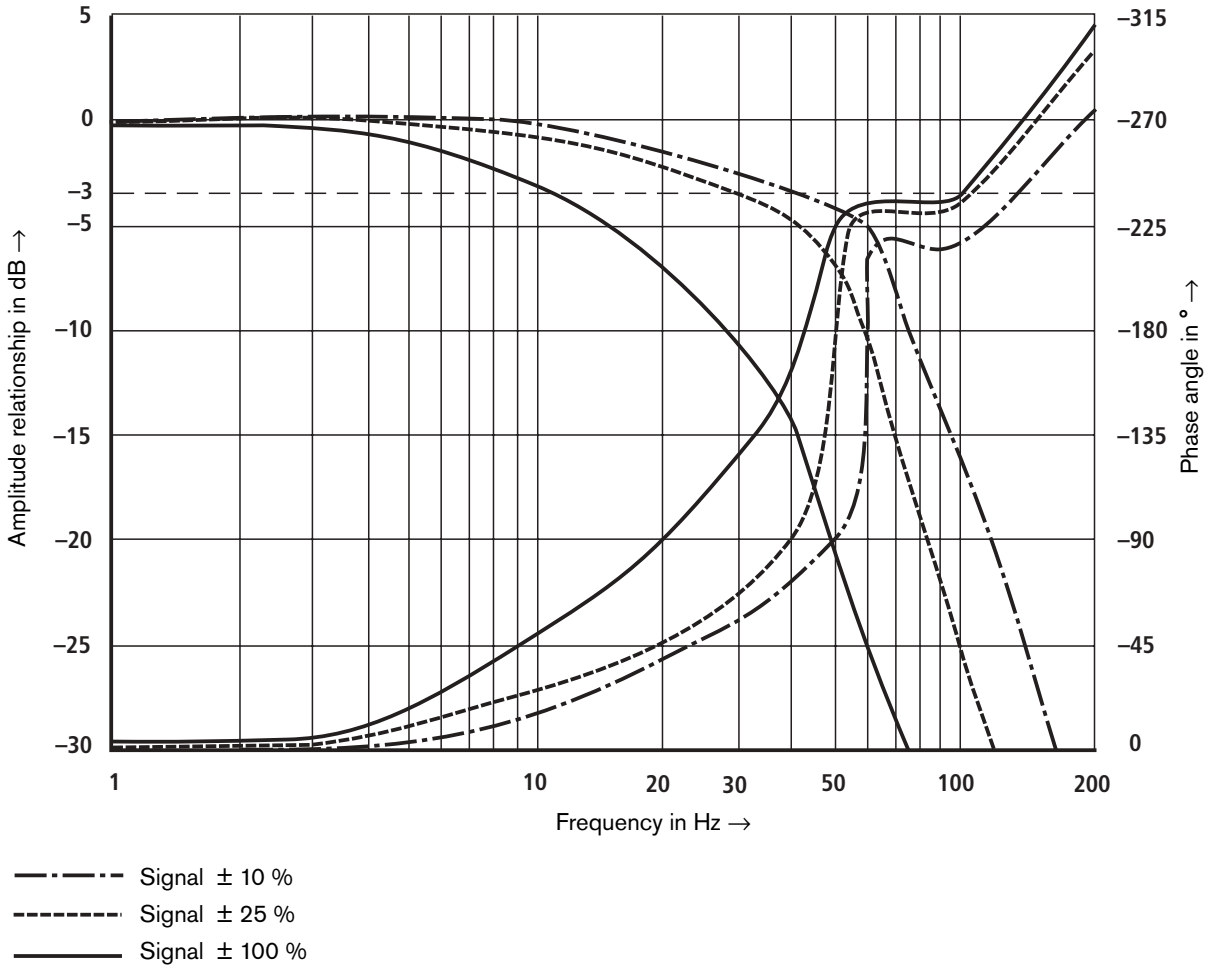

Courtesy of CMA/Flodyne/Hydradyne ▪ Motion Control ▪ Hydraulic ▪ Pneumatic ▪ Electrical ▪ Mechanical ▪ (800) 426-5480 ▪ www.cmafh.com

Flow for type 4WREE (measured with HLP46, ϑ_{oil} = 40 °C ± 5 °C) NS6

Load function with maximum valve opening
Nominal flows 8, 16 and 32 l/min
Spool symbol „V“

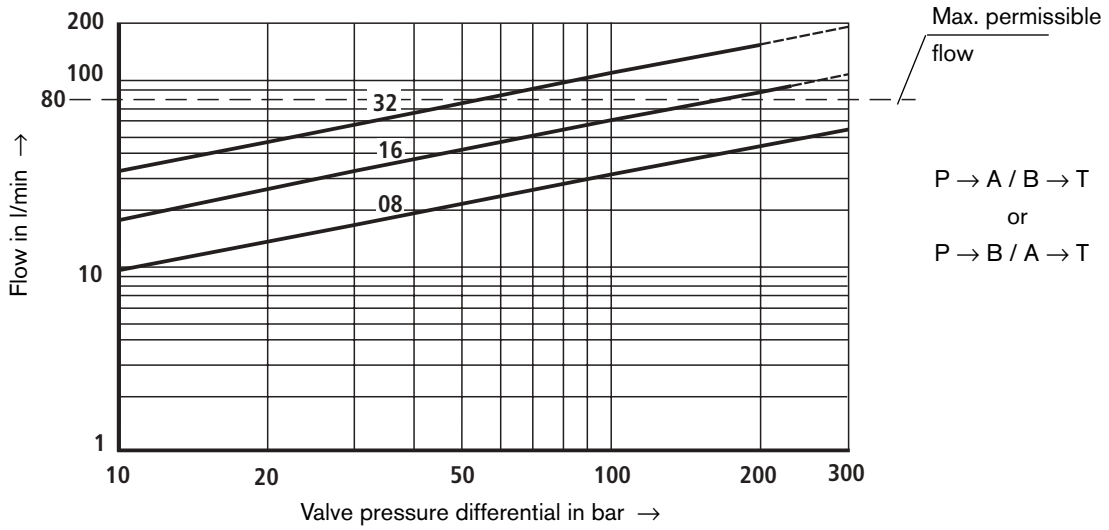

Take the maximum permissible flow of 80 l/min into account!

Flow for type 4WREE (measured with HLP46, ϑ_{oil} = 40 °C ± 5 °C) NS10

Load function with maximum valve opening
Nominal flows 25, 50 and 75 l/min
Spool symbol „V“

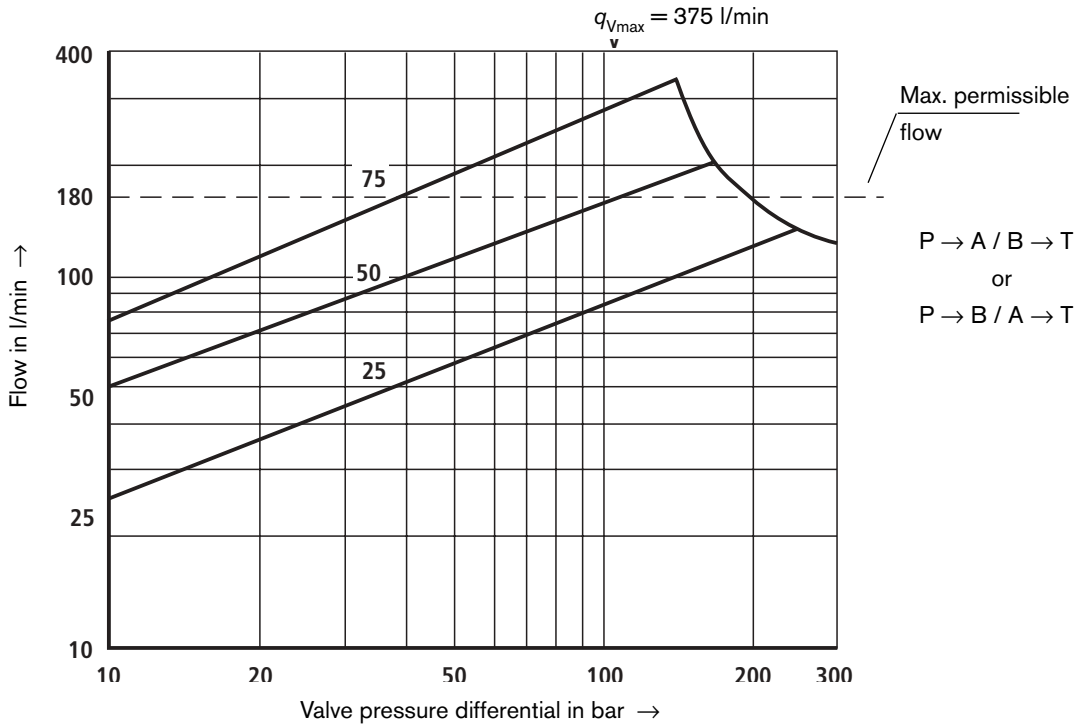

Take the maximum permissible flow of 180 l/min into account!

Courtesy of CMA/Flodyne/Hydradyne ▪ Motion Control ▪ Hydraulic ▪ Pneumatic ▪ Electrical ▪ Mechanical ▪ (800) 426-5480 ▪ www.cmafh.com

Unit dimensions: type 4WRE 6 (nominal dimensions in mm) **NS6**

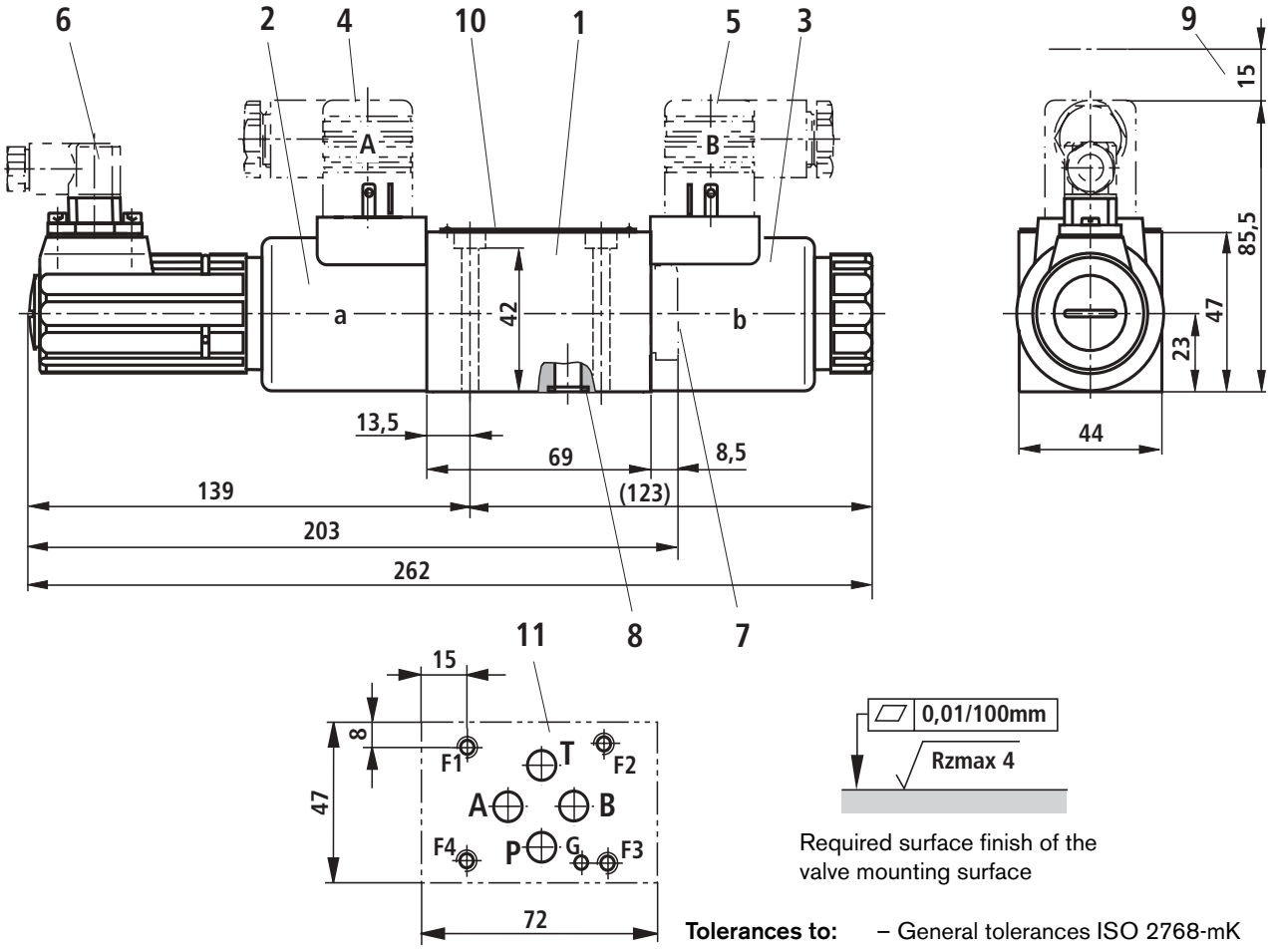

Required surface finish of the valve mounting surface

Tolerances to: – General tolerances ISO 2768-mK

1 Valve housing
2 Proportional solenoid "a" with inductive position transducer
3 Proportional solenoid "b"
4 Plug-in connector "A", colour grey, separate order – see page 7
5 Plug-in connector "B", colour black, separate order – see page 7
6 Plug-in connector for inductive position transducer, separate order – see page 7
7 Plug for valves with one solenoid (2 switching positions, versions **EA** or **WA**)
8 Identical seal rings for ports A, B, P and T
9 Space required to remove the plug-in connector
10 Name plate
11 Machined valve mounting surface, connection location to ISO 4401 (**with** locating pin hole)
Code: 4401-03-02-0-94 (explanation to ISO 5783)
Deviation from the standard:
- without locating pin hole „G“
- ports P, A, B and T mit Ø8 mm

Subplates to catalogue sheet RE 45052 and valve fixing screws must be ordered separately.

Subplates: G341/01 (G1/4)
G342/01 (G3/8)
G502/01 (G1/2)

Valve fixing screws (separate order)
The following valve fixing screws are recommended:

– **4 S.H.C.S. ISO 4762 - M5 x 50 - 10.9-flZn-240h-L**
(friction value $\mu_{total} = 0.09$ to 0.14)
Tightening torque $M_A = 7$ Nm ± 10%
Material No. **R913000064** (separate order)

or

– **4 S.H.C.S. ISO 4762 - M5 x 50 - 10.9**
(friction value $\mu_{total} = 0.12$ to 0.17)
Tightening torque $M_A = 8.9$ Nm ± 10%

Courtesy of CMA/Flodyne/Hydradyne • Motion Control • Hydraulic • Pneumatic • Electrical • Mechanical • (800) 426-5480 • www.cmafh.com

Unit dimensions: type 4WREE 6 (nominal dimensions in mm) NS6

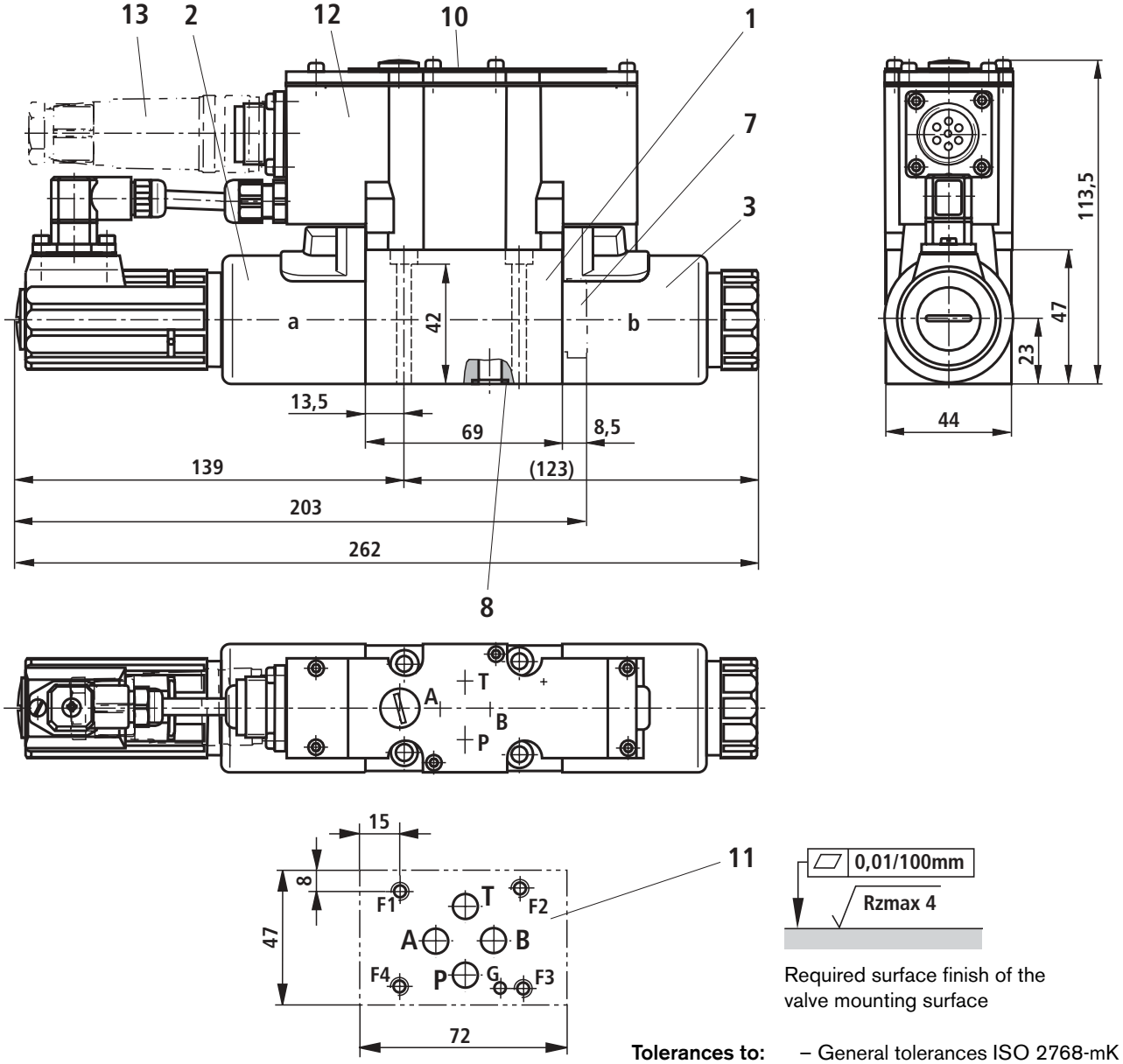

Required surface finish of the valve mounting surface

Tolerances to: – General tolerances ISO 2768-mK

1 Valve housing

2 Proportional solenoid "a" with inductive position transducer

3 Proportional solenoid "b"

7 Plug for valves with one solenoid
(2 switching positions, versions **EA** or **WA**)

8 Identical seal rings for ports A, B, P and T

10 Name plate

11 Machined valve mounting surface,
connection location to ISO 4401 (**with** locating pin hole)
Code: 4401-03-02-0-94 (explanation to ISO 5783)
Deviation from the standard:
- without locating pin hole „G“
- ports P, A, B and T mit Ø8 mm

12 Integrated electronics (OBE)

13 Plug-in connector,
separate order – see page 8

Subplates to catalogue sheet RE 45052 and valve fixing screws must be ordered separately.

Subplates: G341/01 (G1/4)
G342/01 (G3/8)
G502/01 (G1/2)

Valve fixing screws (separate order)
The following valve fixing screws are recommended:

– **4 S.H.C.S. ISO 4762 - M5 x 50 - 10.9-flZn-240h-L**
(friction value μ_{total} = 0.09 to 0.14)
Tightening torque M_A = 7 Nm ± 10%
Material No. **R913000064** (separate order)

or

– **4 S.H.C.S. ISO 4762 - M5 x 50 - 10.9**
(friction value μ_{total} = 0.12 to 0.17)
Tightening torque M_A = 8.9 Nm ± 10%

Courtesy of CMA/Flodyne/Hydradyne ▪ Motion Control ▪ Hydraulic ▪ Pneumatic ▪ Electrical ▪ Mechanical ▪ (800) 426-5480 ▪ www.cmafh.com

Unit dimensions: type 4WRE 10 (nominal dimensions in mm) **NS10**

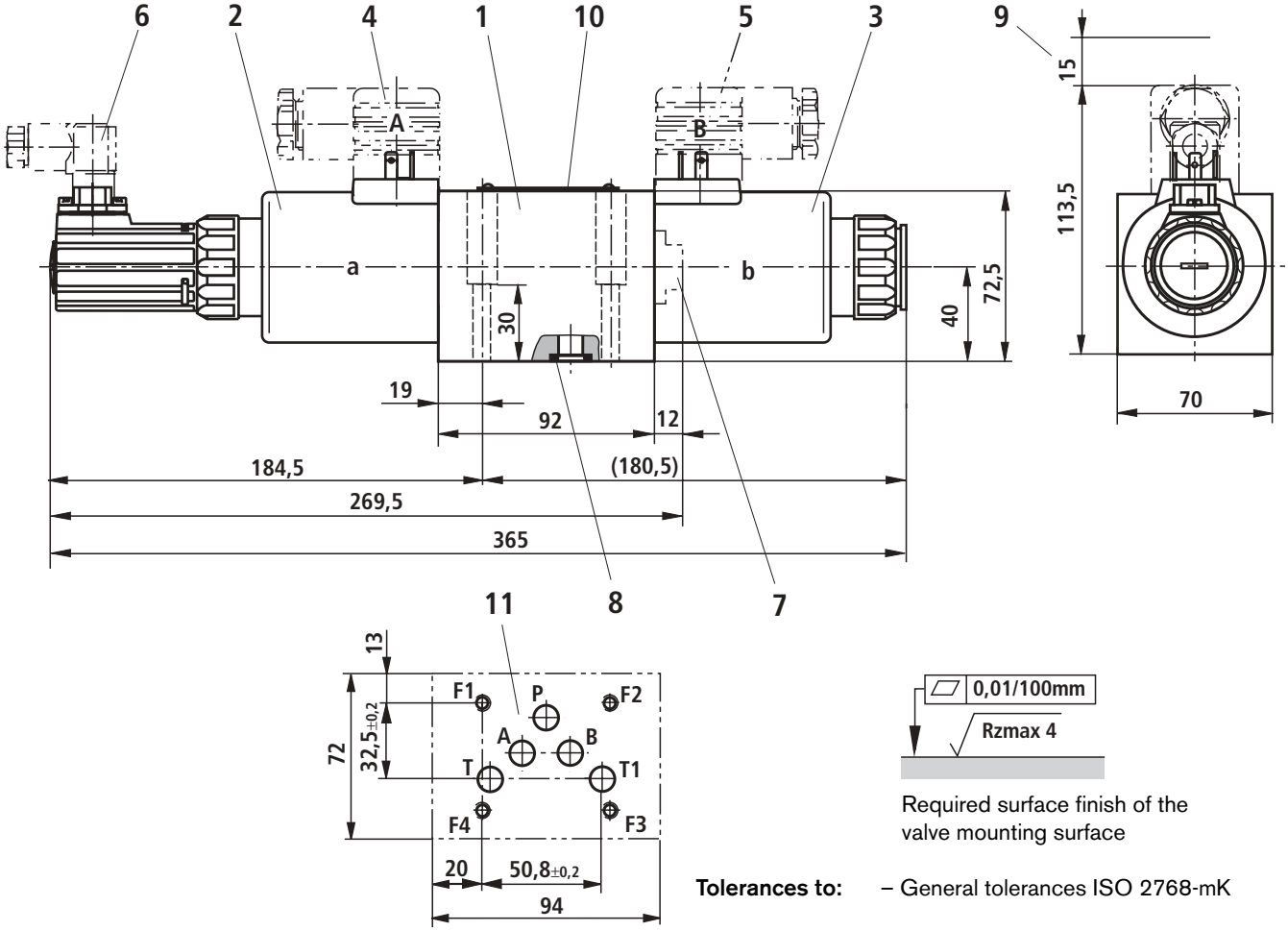

Required surface finish of the valve mounting surface

Tolerances to: – General tolerances ISO 2768-mK

1 Valve housing

2 Proportional solenoid "a" with inductive position transducer

3 Proportional solenoid "b"

4 Plug-in connector "A", colour grey, separate order – see page 7

5 Plug-in connector "B", colour black, separate order – see page 7

6 Plug-in connector for position transducer, separate order – see page 7

7 Plug for valves with one solenoid (2 switching positions, versions **EA** or **WA**)

8 Identical seal rings for ports A, B, P, T and T1

9 Space required to remove the plug-in connector

10 Name plate

11 Machined valve mounting surface, connection location to ISO 4401 (**with** locating pin hole)
Code: 4401-05-04-0-94 (explanation to ISO 5783)
Deviation from the standard: Port T1 Ø11.2 mm

Subplates to catalogue sheet RE 45054 and valve fixing screws must be ordered separately.

Subplates: G66/01 (G3/8)
G67/01 (G1/2)
G534/01 (G3/4)

Valve fixing screws (separate order)
The following valve fixing screws are recommended:

– **4 S.C.H.S. ISO 4762 - M6 x 40 - 10.9-flZn-240h-L**
(friction value $\mu_{total} = 0.09$ to 0.14)
Tightening torque $M_A = 12.5$ Nm ± 10%,
Material No. **R913000058** (separate order)

or

– **4 S.C.H.S. ISO 4762 - M6 x 40 - 10.9**
(friction value $\mu_{total} = 0.12$ to 0.17)
Tightening torque $M_A = 15{,}5$ Nm ± 10%

Courtesy of CMA/Flodyne/Hydradyne ▪ Motion Control ▪ Hydraulic ▪ Pneumatic ▪ Electrical ▪ Mechanical ▪ (800) 426-5480 ▪ www.cmafh.com

Unit dimensions: type 4WREE 10 (nominal dimensions in mm) NS10

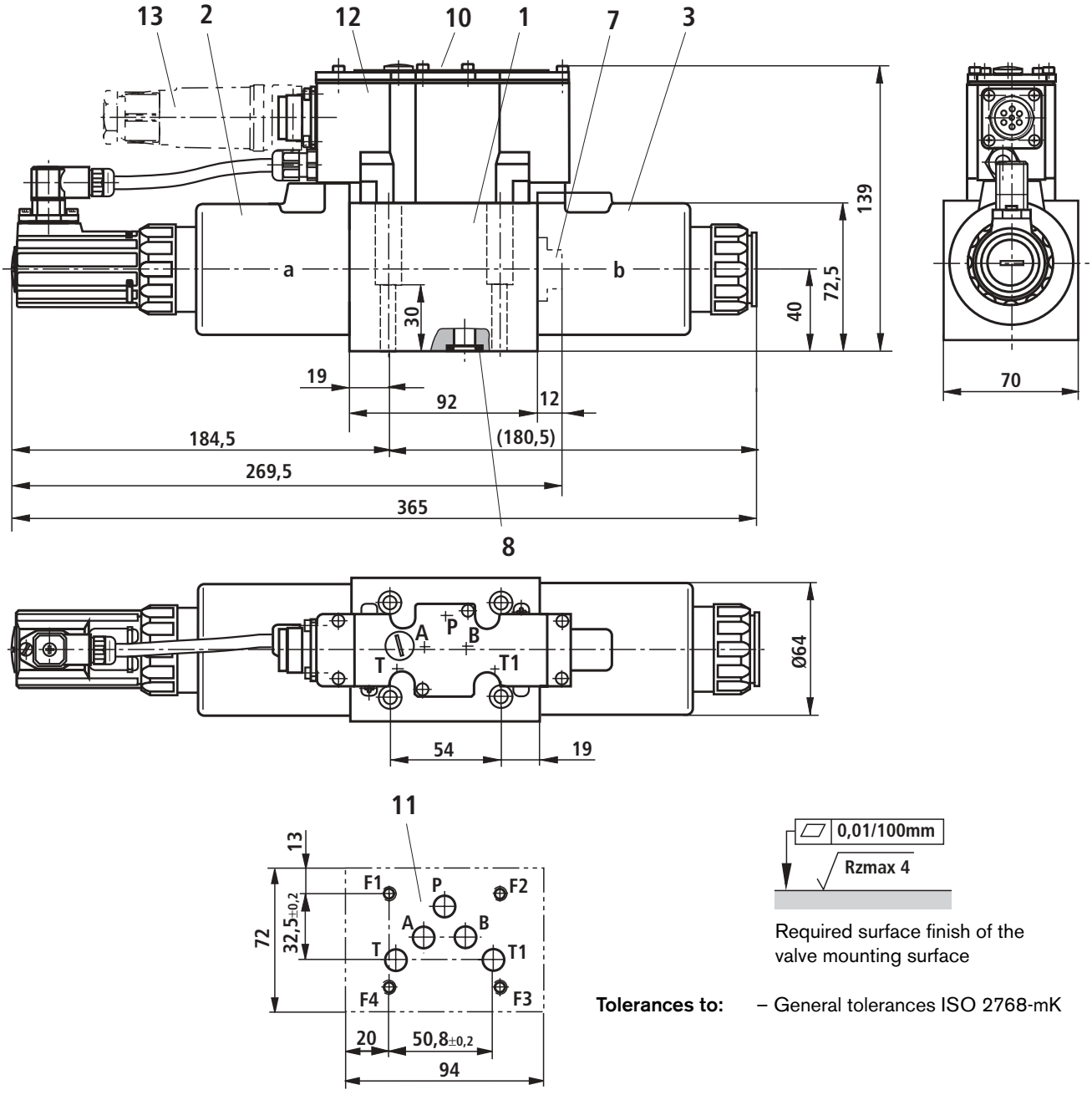

Required surface finish of the valve mounting surface

Tolerances to: – General tolerances ISO 2768-mK

1 Valve housing
2 Proportional solenoid "a" with inductive position transducer
3 Proportional solenoid "b"
7 Plug for valves with one solenoid
(2 switching positions, versions **EA** or **WA**)
8 Identical seal rings for ports A, B, P, T and T1
10 Name plate
11 Machined valve mounting surface,
connection location to ISO 4401 (**with** locating pin hole)
Code: 4401-05-04-0-94 (explanation to ISO 5783)
Deviation from the standard: Port T1 Ø11.2 mm
12 Integrated electronics (OBE)
13 Plug-in connector,
separate order – see page 8

Subplates to catalogue sheet RE 45054 and valve fixing screws must be ordered separately.

Subplates: G66/01 (G3/8)
G67/01 (G1/2)
G534/01 (G3/4)

Valve fixing screws (separate order)
The following valve fixing screws are recommended:

– **4 S.C.H.S. ISO 4762 - M6 x 40 - 10.9-flZn-240h-L**
(friction value μ_{total} = 0.09 to 0.14)
Tightening torque M_A = 12.5 Nm ± 10%,
Material No. **R913000058** (separate order)

or

– **4 S.C.H.S. ISO 4762 - M6 x 40 - 10.9**
(friction value μ_{total} = 0.12 to 0.17)
Tightening torque M_A = 15,5 Nm ± 10%

Notes

Courtesy of CMA/Flodyne/Hydradyne ▪ Motion Control ▪ Hydraulic ▪ Pneumatic ▪ Electrical ▪ Mechanical ▪ (800) 426-5480 ▪ www.cmafh.com

Bosch Rexroth AG
Hydraulics
Zum Eisengießer 1
97816 Lohr am Main, Germany
Telefon +49 (0) 93 52 / 18-0
Telefax +49 (0) 93 52 / 18-23 58
documentation@boschrexroth.de
www.boschrexroth.de

© This document, as well as the data, specifications and other informations set forth in it, are the exclusive property of Bosch Rexroth AG. Without their consent it may not be reproduced or given to third parties.
The data specified above only serves to describe the product. No statements concerning a certain condition or suitability for a certain application can be derived from our information. The details stated do not release you from the responsibility for carrying out your own assessment and verification. It must be remembered that our products are subject to a natural process of wear and ageing.